CertusPro-NX Voice and Vision Machine Learning Board

Evaluation Board User Guide

FPGA-EB-02050-1.0

October 2021

Disclaimers

Lattice makes no warranty, representation, or guarantee regarding the accuracy of information contained in this document or the suitability of its products for any particular purpose. All information herein is provided AS IS, with all faults and associated risk the responsibility entirely of the Buyer. Buyer shall not rely on any data and performance specifications or parameters provided herein. Products sold by Lattice have been subject to limited testing and it is the Buyer's responsibility to independently determine the suitability of any products and to test and verify the same. No Lattice products should be used in conjunction with mission- or safety-critical or any other application in which the failure of Lattice's product could create a situation where personal injury, death, severe property or environmental damage may occur. The information provided in this document is proprietary to Lattice Semiconductor, and Lattice reserves the right to make any changes to the information in this document or to any products at any time without notice.

© 2021 Lattice Semiconductor Corp. All Lattice trademarks, registered trademarks, patents, and disclaimers are as listed at www.latticesemi.com/legal.
All other brand or product names are trademarks or registered trademarks of their respective holders. The specifications and information herein are subject to change without notice.

Contents

Acronyms in This Document 5
1. Introduction 6
1.1. Further Information 8
2. Headers and Jumpers 9
3. Board Programming 10
3.1. Programming Circuit 10
3.2. Programming the Board 10
4. CertusPro-NX Interface Support 13
4.1. HiRes Camera Sensor Interfaces 13
4.2. LoRes Camera Sensor Interface 13
4.3. Microphone Sensor Interface 13
4.4. Video Out Interface 14
5. Power Supply 15
6. CertusPro-NX I/O Ball Mapping to Connectors 16
7. Status Indicators 20
8. Input Switches and Pushbuttons 20
9. Ordering Information 20
References 21
Technical Support Assistance 21
Appendix A. CertusPro-NX Voice and Vision Machine Learning Board Schematics 22
Appendix B. CertusPro-NX Voice and Vision Machine Learning Board Bill of Materials 35
Revision History 42

© 2021 Lattice Semiconductor Corp. All Lattice trademarks, registered trademarks, patents, and disclaimers are as listed at www.latticesemi.com/legal.
All other brand or product names are trademarks or registered trademarks of their respective holders. The specifications and information herein are subject to change without notice.

Figures

Figure 1.1. Top View of CertusPro-NX Voice and Vision Machine Learning Board....7
Figure 1.2. Bottom View of CertusPro-NX Voice and Vision Machine Learning Board....7
Figure 3.1. Programming Block....10
Figure 3.2. Starting Programmer....10
Figure 3.3. Entering File Name....11
Figure 4.1. HiRes Camera Sensor Interface....13
Figure 4.2. Upstream Connector Interface....13
Figure 4.3. Microphone Sensor Interface....13
Figure 4.4. Video Out Interface....14
Figure 5.1. Power Supply Block....15
Figure A.1. Title Page....22
Figure A.2. Block Diagram....23
Figure A.3. FTDI/USB Interface....24
Figure A.4. PMOD Connectors and Mic....25
Figure A.5. HyperRAM and GPIO....26
Figure A.6. EVDK and HiMax Cameras....27
Figure A.7. USB3 Out....28
Figure A.8. Flash Interface....29
Figure A.9. Power Banks....30
Figure A.10. Unused and Power Banks....31
Figure A.11. Power Distribution and VCCIO....32
Figure A.12. RPC DRAMs....33
Figure A.13. Power Diagram....34

Tables

Table 2.1. Headers and Test Connectors....9
Table 5.1. Device Power Rail Summary....15
Table 6.1. Camera Sensor Connector Pin Mapping....16
Table 6.2. PMOD Connector Pin Mapping....17
Table 6.3. HyperRAM Pin Mapping....17
Table 6.4. CYUSB3014 Pin Mapping....18
Table 6.5. MIPI DPHY Expansion Header....19
Table 7.1. Status LED I/O Map....20
Table 8.1. Switch and Pushbutton I/O Map....20
Table 9.1. Reference Part Number....20

© 2021 Lattice Semiconductor Corp. All Lattice trademarks, registered trademarks, patents, and disclaimers are as listed at www.latticesemi.com/legal.
All other brand or product names are trademarks or registered trademarks of their respective holders. The specifications and information herein are subject to change without notice.

Acronyms in This Document

A list of acronyms used in this document.

Acronym	Definition
CMOS	Complementary Metal-Oxide Semiconductor
CSI-2	Camera Serial Interface
DDR	Double Data Rate
DSI	Display Serial Interface
FTDI	Future Technology Devices International
GPIO	General Purpose Input/Output
I^2C	Inter-Integrated Circuit
I^2S	Inter-IC Sound
JTAG	Joint Test Action Group
LDO	Low Dropout
LVDS	Low-Voltage Differential Signaling
MIPI	Mobile Industry Processor Interface
ML	Machine Learning
MSPI	Master SPI
PMOD	Peripheral Module
SMA	SubMiniature version A
SPI	Serial Peripheral Interface
SSPI	Slave SPI
VIP	Video Interface Platform
VTT	Tracking Termination Voltage

© 2021 Lattice Semiconductor Corp. All Lattice trademarks, registered trademarks, patents, and disclaimers are as listed at www.latticesemi.com/legal.
All other brand or product names are trademarks or registered trademarks of their respective holders. The specifications and information herein are subject to change without notice.

1. Introduction

This document describes the Lattice Semiconductor CertusPro™-NX Voice and Vision Machine Learning Board. The board's key component is the CertusPro-NX FPGA, which receives input from high or low-resolution cameras and microphones, and sends video output over USB3. This board is ideal for machine learning applications and features onboard HyperRAM as well as PMOD (Peripheral Module) connectors for off board support.

The content of this user guide includes descriptions of onboard settings, connectors, programming circuit, a complete set of schematics, and bill of materials for the CertusPro-NX Voice and Vision Machine Learning Board.

The key features of the CertusPro-NX Voice and Vision Machine Learning Board include:

- CertusPro-NX FPGA (LFCPNX-100-BBG484)
  - Four-lane MIPI CSI-2 receiver (Soft D-PHY) interface for high resolution camera data
  - Serial interface for low resolution camera data
  - I^2S interface for audio data from two microphones
  - SPI flash configuration
  - General Purpose Input/Output
- Board Resources
  - 2 × 64 Mb HyperRAM available for ML (Machine Learning) applications
  - Cypress CYUSB3014 for Video Output to PC over USB3
  - Four PMOD connectors expansion headers available
  - Expansion header for Soft MIPI DPHY connectivity
- Programming Circuit
  - From programming software through USB/FTDI interface (JTAG or SPI)
  - From onboard Flash
  - SPI external programmer using header

Figure 1.1 and Figure 1.2 show the top and bottom views of the CertusPro-NX Voice and Vision Machine Learning Board and its key components.

© 2021 Lattice Semiconductor Corp. All Lattice trademarks, registered trademarks, patents, and disclaimers are as listed at www.latticesemi.com/legal.
All other brand or product names are trademarks or registered trademarks of their respective holders. The specifications and information herein are subject to change without notice.

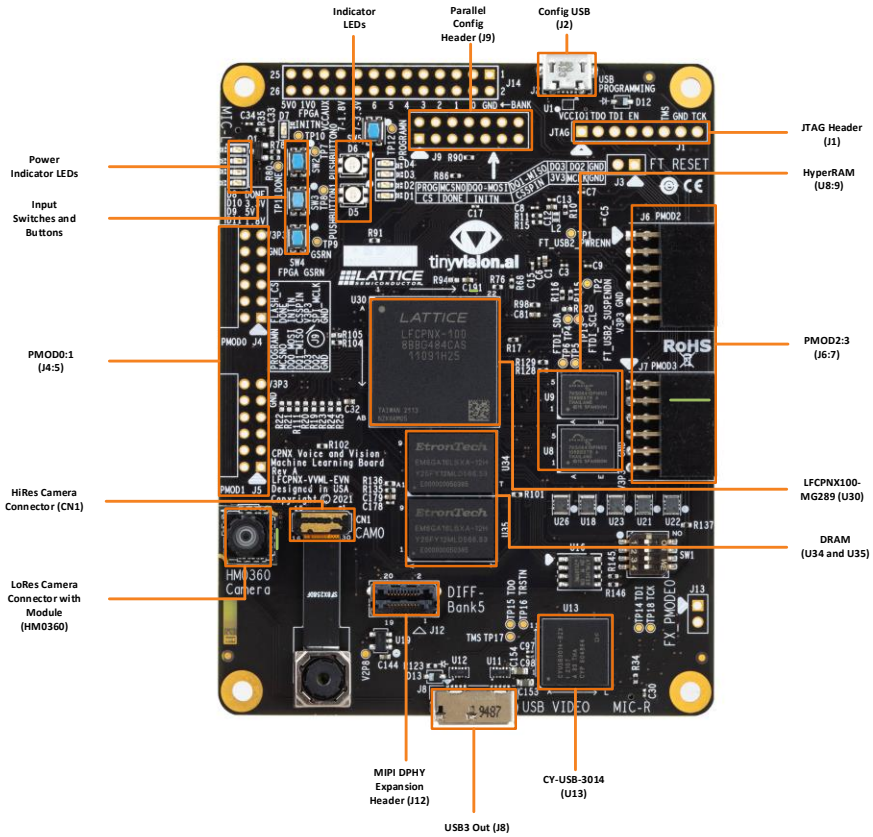

Figure 1.1. Top View of CertusPro-NX Voice and Vision Machine Learning Board

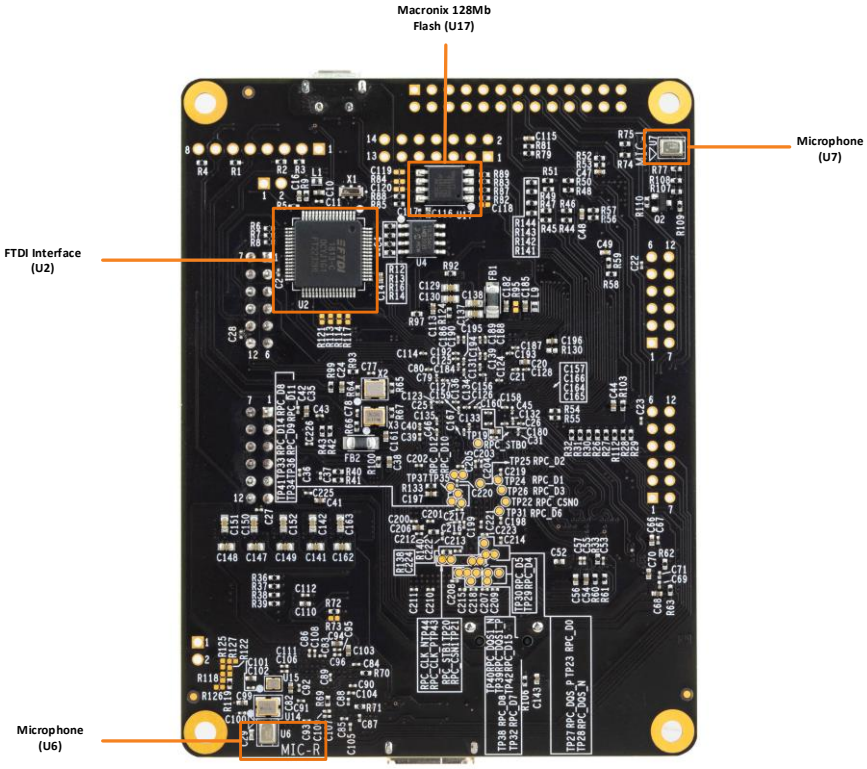

Figure 1.2. Bottom View of CertusPro-NX Voice and Vision Machine Learning Board

© 2021 Lattice Semiconductor Corp. All Lattice trademarks, registered trademarks, patents, and disclaimers are as listed at www.latticesemi.com/legal.
All other brand or product names are trademarks or registered trademarks of their respective holders. The specifications and information herein are subject to change without notice.

1.1. Further Information

The following references provide detailed information on the CertusPro-NX Voice and Vision Machine Learning Board and the CertusPro-NX FPGA device:

- Appendix A. CertusPro-NX Voice and Vision Machine Learning Board Schematics
- Appendix B. CertusPro-NX Voice and Vision Machine Learning Board Bill of Materials
- www.latticesemi.com/boards for more information on boards and kits
- CertusPro-NX Family Data Sheet (FPGA-DS-02086) for details on the CertusPro-NX FPGA

© 2021 Lattice Semiconductor Corp. All Lattice trademarks, registered trademarks, patents, and disclaimers are as listed at www.latticesemi.com/legal.
All other brand or product names are trademarks or registered trademarks of their respective holders. The specifications and information herein are subject to change without notice.

2. Headers and Jumpers

Table 2.1 lists the headers and jumpers as shown in Figure 1.1 and Figure 1.2.

Table 2.1. Headers and Test Connectors

Part	Description	Settings (Default first)
J1	JTAG Header	—
J3	FTDI Reset Jumper	Open (active FTDI)/Short (reset FTDI)
J4, J5, J6, J7	PMOD Headers	—
J9	Parallel Configuration Header	—
J12	MIPI DPHY Expansion Header	—
J13	USB3 Chip Mode	Open (FX_PMODE0=HiZ)/Short (FX_PMODE0=V3P3)
J14	Current Measurement Headers	Open (functional, attach measurement probes)

© 2021 Lattice Semiconductor Corp. All Lattice trademarks, registered trademarks, patents, and disclaimers are as listed at www.latticesemi.com/legal.
All other brand or product names are trademarks or registered trademarks of their respective holders. The specifications and information herein are subject to change without notice.

3. Board Programming

3.1. Programming Circuit

CertusPro-NX can be programmed with USB through the FTDI/JTAG interface using Lattice Radiant™ programmer software, or by an external programmer connected to Header J9.

Figure 3.1 shows the programming block of CertusPro-NX Voice and Vision Machine Learning board.

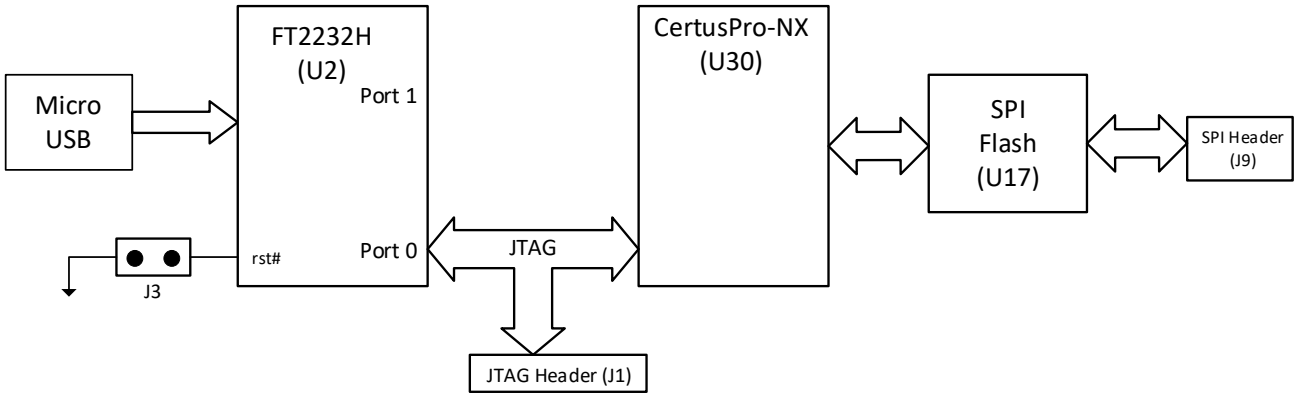

Figure 3.1. Programming Block

The FTDI/JTAG interface is used to program both CertusPro-NX and SPI Flash Memory (Macronix 25L12833 128Mb).

3.2. Programming the Board

This section describes the procedure for programming a pattern to the SRAM (volatile) configuration memory of CertusPro-NX. The CertusPro-NX can be programmed through the JTAG, I^2C, or SPI interfaces. This section focuses on JTAG programming through the USB/FTDI interface. For details on the other configuration modes, refer to the sysCONFIG Usage Guide for Nexus Platform (FPGA-TN-02099).

The board is programmed using Lattice Radiant Programmer software, which can be started as a stand-alone tool or from a Lattice Radiant project.

To program the board:

1. Power ON the board by connecting the USB cable.
2. Start a programming project by launching the tool and initiating a board scan, as shown in Figure 3.2.

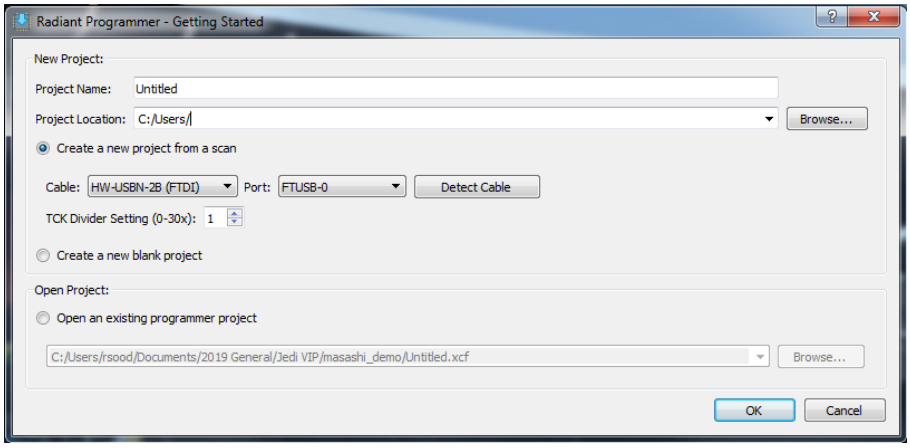

Figure 3.2. Starting Programmer

© 2021 Lattice Semiconductor Corp. All Lattice trademarks, registered trademarks, patents, and disclaimers are as listed at www.latticesemi.com/legal.
All other brand or product names are trademarks or registered trademarks of their respective holders. The specifications and information herein are subject to change without notice.

3. When the board is successfully scanned, the window shown in Figure 3.3 appears. This interface allows you to enter the file name.

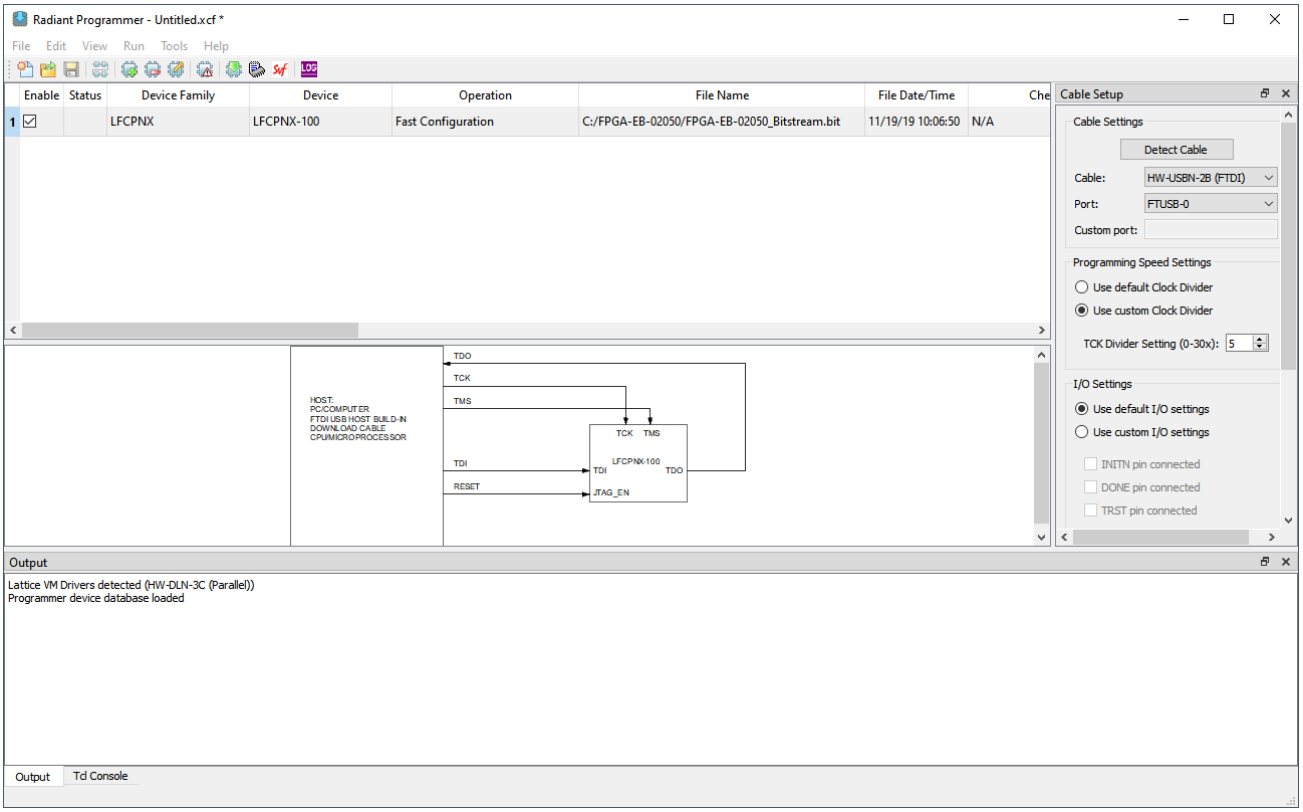

Figure 3.3. Entering File Name

4. Double-click on the **Operation** field and select the appropriate programming mode. In this example, **Fast Configuration** of the SRAM array through JTAG is selected.

© 2021 Lattice Semiconductor Corp. All Lattice trademarks, registered trademarks, patents, and disclaimers are as listed at www.latticesemi.com/legal.
All other brand or product names are trademarks or registered trademarks of their respective holders. The specifications and information herein are subject to change without notice.

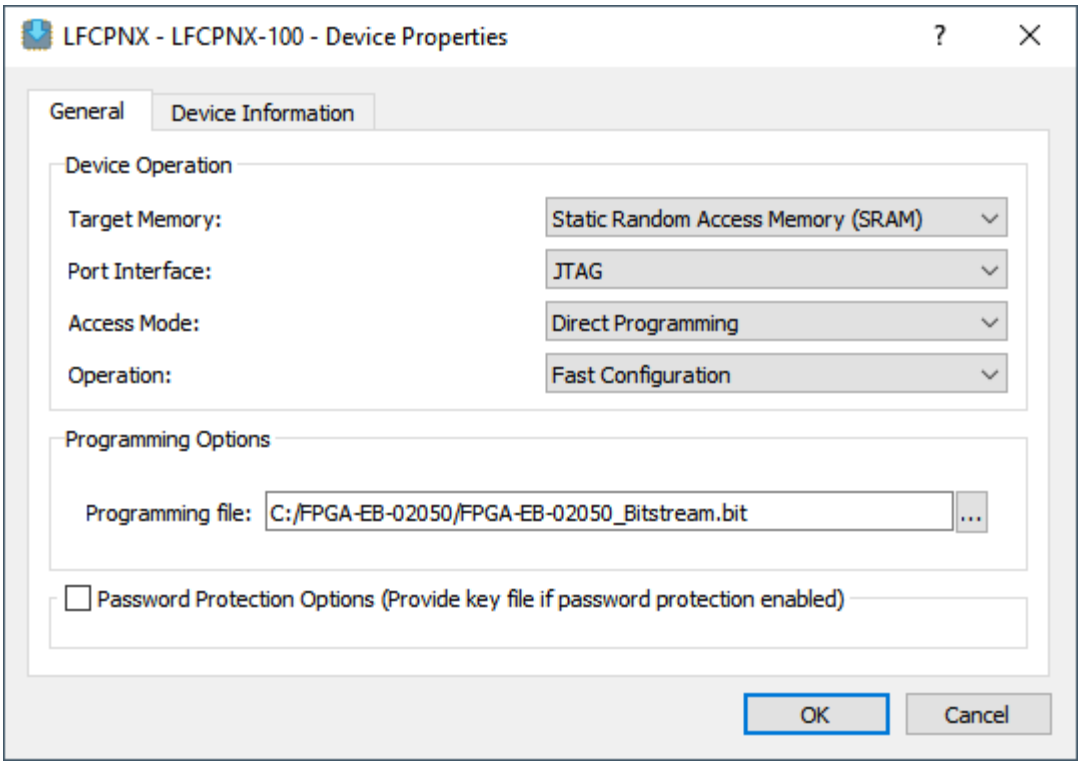

Figure 3.4. Entering Programming Mode

5. Click the **Program** button to configure the CertusPro-NX on the board.

© 2021 Lattice Semiconductor Corp. All Lattice trademarks, registered trademarks, patents, and disclaimers are as listed at www.latticesemi.com/legal.
All other brand or product names are trademarks or registered trademarks of their respective holders. The specifications and information herein are subject to change without notice.

4. CertusPro-NX Interface Support

The CertusPro-NX Voice and Vision Machine Learning board supports various onboard interfaces and external interfaces. The sections below describe key onboard interfaces supported on CertusPro-NX Voice and Vision Machine Learning board.

4.1. HiRes Camera Sensor Interfaces

Figure 4.1 shows the block diagram of the camera sensor interface. The Sony IMX258 image sensor is used as the input source on the camera sensor connector. The data path interface between the camera sensor module and CertusPro-NX is CSI-2. The cameras are configured using I^2C interface from the CertusPro-NX.

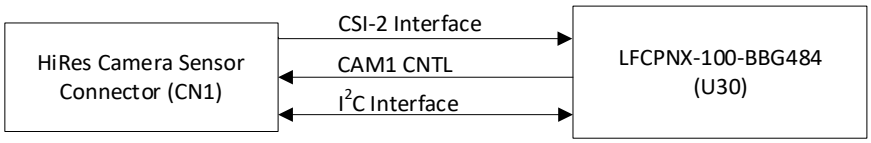

Figure 4.1. HiRes Camera Sensor Interface

4.2. LoRes Camera Sensor Interface

Figure 4.2 shows the block diagram of the camera sensor interface. The HiMax HM360 image sensor is used as the input source on the camera sensor connector. The data path interface between the camera sensor module and CertusPro-NX is serial differential. The cameras are configured using I^2C interface from the CertusPro-NX.

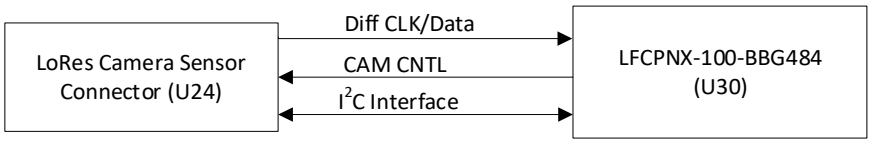

Figure 4.2. Upstream Connector Interface

4.3. Microphone Sensor Interface

Figure 4.3 shows the block diagram of the microphone sensor interface. The microphone sensors are Knowles SPH0645LM4H. There are two sensors on opposite sides of the board. The sensors share the I^2S bus to the CertusPro-NX, which is the I^2S master.

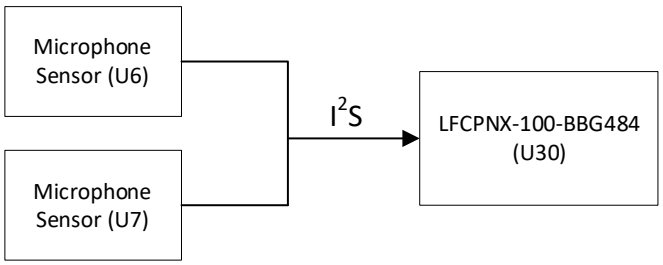

Figure 4.3. Microphone Sensor Interface

© 2021 Lattice Semiconductor Corp. All Lattice trademarks, registered trademarks, patents, and disclaimers are as listed at www.latticesemi.com/legal.
All other brand or product names are trademarks or registered trademarks of their respective holders. The specifications and information herein are subject to change without notice.

4.4. Video Out Interface

Figure 4.4 shows the block diagram of the video out interface. The video data from the CertusPro-NX is sent to the CYUSB3014, which processes the data and sends it out through the USB3.

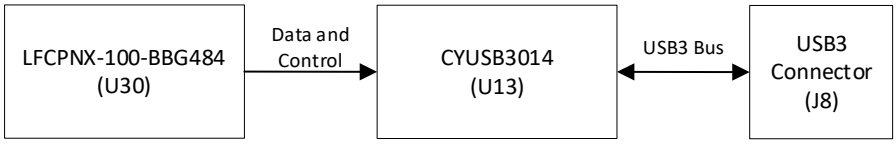

Figure 4.4. Video Out Interface

© 2021 Lattice Semiconductor Corp. All Lattice trademarks, registered trademarks, patents, and disclaimers are as listed at www.latticesemi.com/legal.
All other brand or product names are trademarks or registered trademarks of their respective holders. The specifications and information herein are subject to change without notice.

5. Power Supply

The power supply to the CertusPro-NX Voice and Vision Machine Learning Board is provided from the J2 or J8 USB connectors. If either or both USB ports are connected to a powered cable, the board powers up.

Figure 5.1 shows the power supply block of CertusPro-NX Voice and Vision Machine Learning Board. The 5 V is supplied through the USB, and then board converters create the remaining 3.3 V, 2.8 V, 1.8 V, 1.2 V, and 1.0 V supplies required by the board components. Each I/O and core voltage rail on the board is accessible by a test point on the board.

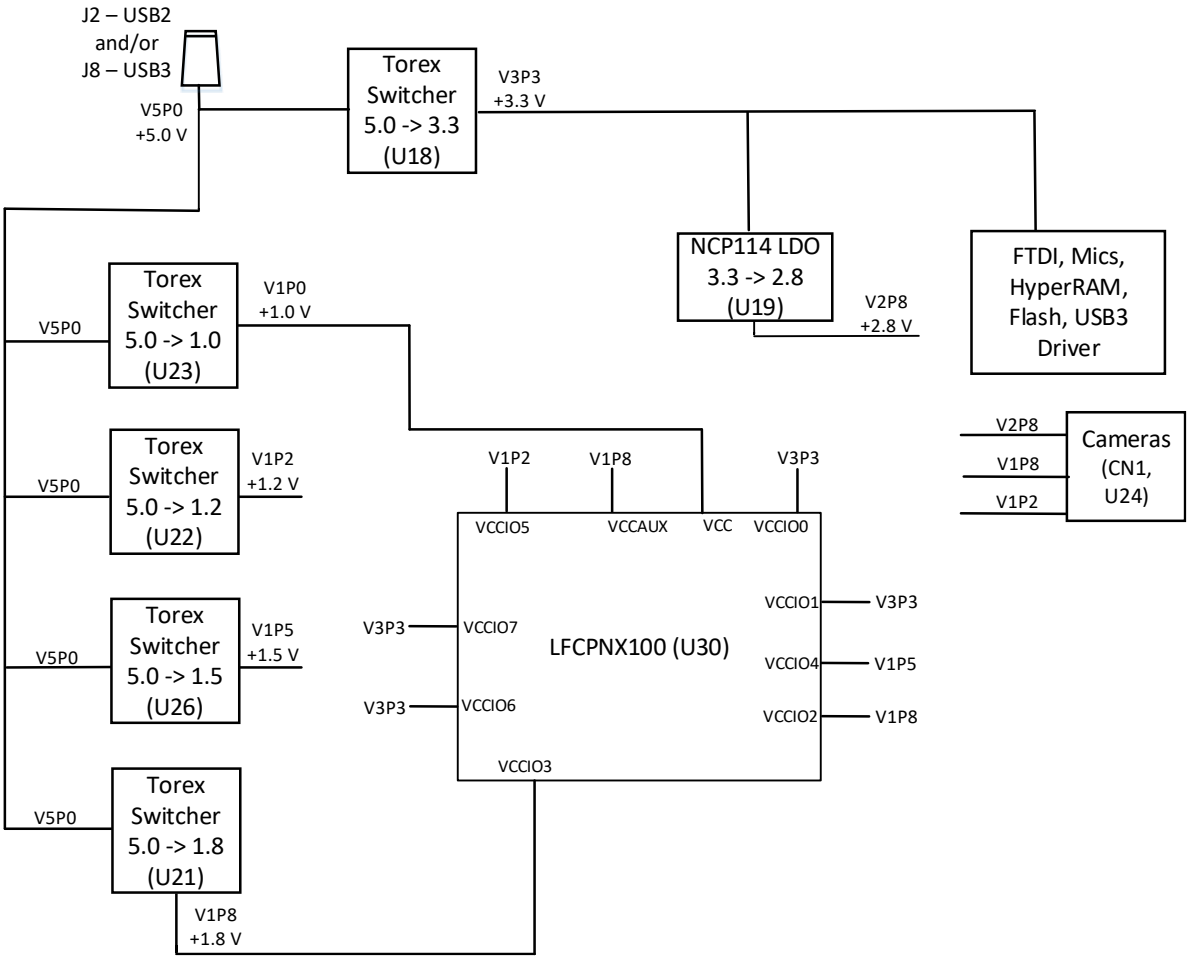

Figure 5.1. Power Supply Block

Table 5.1 lists the board voltage rails, including the rail source voltage, test point number, and voltage on net.

Table 5.1. Device Power Rail Summary

Voltage Rail	Source Rail	Voltage on Net (V)	Status LED	LED Color
V5P0	USB	5.0	D9	Blue
V3P3	V5P0	3.3	D10	Blue
V2P8	V3P3	2.8	—	—
V1P8	V5P0	1.8	D11	Green
V1P5	V5P0	1.5	—	—
V1P2	V5P0	1.2	—	—
V1P0	V5P0	1.0	—	—

© 2021 Lattice Semiconductor Corp. All Lattice trademarks, registered trademarks, patents, and disclaimers are as listed at www.latticesemi.com/legal.
All other brand or product names are trademarks or registered trademarks of their respective holders. The specifications and information herein are subject to change without notice.

6. CertusPro-NX I/O Ball Mapping to Connectors

Table 6.1. Camera Sensor Connector Pin Mapping

CN1			U24		
Pin Num	Net Name	Ball Num	Pin Num	Net Name	Ball Num
1	—	—	1	V2P8	—
2	CAM0_CLKN	AB3	2	GND	—
3	CAM0_CLKP	AB2	3	HM_CP	U3
4	GND	—	4	HM_CN	T3
5	CAM0_3N	Y3	5	GND	—
6	CAM0_3P	W3	6	HM_DP	T1
7	GND	—	7	HM_DN	U1
8	CAM0_1N	Y5	8	GND	—
9	CAM0_1P	W5	9	—	—
10	GND	—	10	—	—
11	CAM0_0N	Y6	11	GND	—
12	CAM0_0P	W6	12	V1P8	—
13	GND	—	13	V1P2	—
14	CAM0_2N	Y2	14	GND	—
15	CAM0_2P	W2	15	HM_MCLK	N18
16	GND	—	16	HM_PCLK	L12
17	GND	—	17	HM_CTX_SEL0	M17
18	V2P8	—	18	HM_INT	M16
19	—	—	19	HM_SDA	P14
20	CAM0_MCLK	P19	20	HM_SCL	N13
21	CAM_FRAME_SYNC	R21	21	HM_HSYNC	N12
22	I2C0_SDA	P18	22	HM_VSYNC	N14
23	I2C0_SCL	R20	23	HM_TRIG	L13
24	CAM_RESET	N17	24	GND	—
25	V1P2	—	25	HM_CLK_SEL	M15
26	V1P8	—	26	HM_CLK_RTC	N11
27	GND	—	27	HM_FAE	R22
28	GND	—	28	HM_XSDN	M14
29	V2P8	—	29	HM_XSLEEPN	M13
30	GND	—	30	HM_STROBE	M12

© 2021 Lattice Semiconductor Corp. All Lattice trademarks, registered trademarks, patents, and disclaimers are as listed at www.latticesemi.com/legal.
All other brand or product names are trademarks or registered trademarks of their respective holders. The specifications and information herein are subject to change without notice.

Table 6.2. PMOD Connector Pin Mapping

PMOD0 (J4)			PMOD1 (J5)			PMOD2 (J6)			PMOD3 (J7)		
Pin Num	Net Name	Ball Num	Pin Num	Net Name	Ball Num	Pin Num	Net Name	Ball Num	Pin Num	Net Name	Ball Num
1	PMOD0_1	L6	1	PMOD1_1	L1	1	PMOD2_1	L4	1	PMOD3_1	J7
2	PMOD0_2	L8	2	PMOD1_2	K2	2	PMOD2_2	H1	2	PMOD3_2	K6
3	PMOD0_3	L10	3	PMOD1_3	K3	3	PMOD2_3	G5	3	PMOD3_3	H5
4	PMOD0_4	K10	4	PMOD1_4	J1	4	PMOD2_4	J9	4	PMOD3_4	K4
5	GND	—	5	GND	—	5	GND	—	5	GND	—
6	V3P3	—	6	V3P3	—	6	V3P3	—	6	V3P3	—
7	PMOD0_7	J6	7	PMOD1_7	L2	7	PMOD2_7	L3	7	PMOD3_7	K8
8	PMOD0_8	H6	8	PMOD1_8	M1	8	PMOD2_8	J2	8	PMOD3_8	J8
9	PMOD0_9	H7	9	PMOD1_9	M2	9	PMOD2_9	H4	9	PMOD3_9	L9
10	PMOD0_10	H8	10	PMOD1_10	K1	10	PMOD2_10	G7	10	PMOD3_10	K9
11	GND	—	11	GND	—	11	GND	—	11	GND	—
12	V3P3	—	12	V3P3	—	12	V3P3	—	12	V3P3	—

Table 6.3. HyperRAM Pin Mapping

HyperRAM0 (U8)			HyperRAM1 (U9)		
Pin Name/Num	Net Name	Ball Num	Pin Name/Num	Net Name	Ball Num
RFU1/A2	—	—	RFU1/A2	—	—
RFU2/A5	—	—	RFU2/A5	—	—
CS#/A3	HR0_CS	AA18	CS#/A3	HR1_CS	AA19
RESET#/A4	HR0_RST	AB17	RESET#/A4	HR1_RST	U18
CK#/B1	HR0_CKN	Y18	CK#/B1	HR1_CKN	W21
CK/B2	HR0_CK	Y19	CK/B2	HR1_CK	W22
VSS/B3	GND	—	VSS/B3	GND	—
VSSQ/C1	GND	—	VSSQ/C1	GND	—
VSSQ/E5	GND	—	VSSQ/E5	GND	—
VCC/B4	VCCIO3	—	VCC/B4	VCCIO3	—
VCCQ/E4	VCCIO3	—	VCCQ/E4	VCCIO3	—
VCCQ/D1	VCCIO3	—	VCCQ/D1	VCCIO3	—
RFU3/B5	—	—	RFU3/B5	—	—
RFU4/C2	—	—	RFU4/C2	—	—
RFU5/C5	—	—	RFU5/C5	—	—
RWDS/C3	HR0_RW	V19	RWDS/C3	HR1_RW	Y21
DQ0/D3	HR0_DQ0	V18	DQ0/D3	HR1_DQ0	V22
DQ1/D2	HR0_DQ1	W19	DQ1/D2	HR1_DQ1	AA20
DQ2/C4	HR0_DQ2	AB19	DQ2/C4	HR1_DQ2	V21
DQ3/D4	HR0_DQ3	AB20	DQ3/D4	HR1_DQ3	U21
DQ4/D5	HR0_DQ4	AB21	DQ4/D5	HR1_DQ4	U20
DQ5/E3	HR0_DQ5	AB18	DQ5/E3	HR1_DQ5	Y22
DQ6/E2	HR0_DQ6	AA17	DQ6/E2	HR1_DQ6	AA22
DQ7/E1	HR0_DQ7	W18	DQ7/E1	HR1_DQ7	AA21

© 2021 Lattice Semiconductor Corp. All Lattice trademarks, registered trademarks, patents, and disclaimers are as listed at www.latticesemi.com/legal.
All other brand or product names are trademarks or registered trademarks of their respective holders. The specifications and information herein are subject to change without notice.

Table 6.4. CYUSB3014 Pin Mapping

CYUSB3014 (U13)			CYUSB3014 (U13)		
Pin Name/Num	Net Name	Ball Num	Pin Name/Num	Net Name	Ball Num
PCLK_CLK	FX_PCLK	M10	SSTX-	USB3_SSTXN	USB3:SSTX-
RESETN	FX_RSTN	N8	SSTX+	USB3_SSTXP	USB3:SSTX+
CTL0_SLCSN	FX_CTL0_SLCSN	L1	D+	USB3_DP	USB3:D+
CTL1_SLWRN	FX_CTL1_SLWRN	K2	D-	USB3_DN	USB3:D-
CTL2_SLOEN	FX_CTL2_SLOEN	K3	FSLC0	GND	—
CTL3_SLRDN	FX_CTL3_SLRDN	J1	FSLC1	GND	—
CTL4_FLAGA	—	—	FSLC2	V3P3	—
CTL5_FLAGB	FX_CTL5_FLAGB	L2	CLKIN	MSTCLK_FX3	OSC_19M2:OUT
CTL6_GPIO	—	—	CLKIN_32	CLK_32MHZ	OSC_32768:OUT
CTL7_PKTENDN	FX_CTL7_PKTENDN	M1	TDI	—	TP14
CTL8_GPIO	FX_CTL8_GPIO	M2	TDO	—	TP15
CTL9_GPIO	—	—	TRSTN	—	TP16
CTL10_GPIO	—	—	TMS	—	TP17
CTL11_A1	FX_LV	N4	TCK	—	TP18
CTL12_A0	FX_FV	N7	O60_CHGDET	—	—
INTN_CTL15	FX_INTN_CTL15	K1	PMODE0	FX_PMODE0	—
GPIO_I2SCLK	FX_GPIO_I2SCLK	N3	PMODE1	FX_PMODE1	—
GPIO_I2SSD	FX_GPIO_I2SSD	M11	PMODE2	FX_PMODE2	—
GPIO_I2SWS	FX_GPIO_I2SWS	P10	R_USB2	GND	—
SPISCK_UARTRTS_GPIO	—	—	R_USB3	GND	—
SPISSN_UARTCTS_GPIO	—	—	NC	—	—
SPIMISO_UARTTX_GPIO	FX_SPIMISO_UARTTX	P8	VBATT	V5P0	—
SPIMOSI_UARTRX_GPIO	FX_SPIMOSI_UARTRX	P9	VBUS	V5P0	—
GPIO_I2SMCLK	FX_GPIO_I2SMCLK	K28	AVDD	V1P2	—
GPIO	—	—	CVDDQ	V3P3	—
I2C_SCL	FX_I2C_SCL	R1	U3TXVDDQ	V1P2	—
I2C_SDA	FX_I2C_SDA	R2	U3RXVDDQ	V1P2	—
DQ0	FX_D0	J14	VDD-1:VDD-8	V1P2	—
DQ1	FX_D1	K15	VIO1-1:VIO5	V3P3	—
DQ2	FX_D2	J13	VSS1:VSS14	GND	—
DQ3	FX_D3	L20	AVSS	GND	—
DQ4	FX_D4	K17	U3VSSQ	GND	—
DQ5	FX_D5	K14			
DQ6	FX_D6	L19			
DQ7	FX_D7	K19			
DQ8	FX_D8	J20			
DQ9	FX_D9	G18			
DQ10	FX_D10	J19			
DQ11	FX_D11	H17			
DQ12	FX_D12	J17			
DQ13	FX_D13	N9			
DQ14	FX_D14	N10			
DQ15	FX_D15	M9			
DQ16:DQ31	—	—			
XTALIN	—	—			

© 2021 Lattice Semiconductor Corp. All Lattice trademarks, registered trademarks, patents, and disclaimers are as listed at www.latticesemi.com/legal.
All other brand or product names are trademarks or registered trademarks of their respective holders. The specifications and information herein are subject to change without notice.

CYUSB3014 (U13)			CYUSB3014 (U13)		
Pin Name/Num	Net Name	Ball Num	Pin Name/Num	Net Name	Ball Num
XTALOUT	—	—			
OTG_ID	USB_OTG	USB3:OTG			
SSRX-	USB3_SSRXN	USB3:SSRX-			
SSTX+	USB3_SSRXP	USB3_SSRX+			

Table 6.5. MIPI DPHY Expansion Header

J12		
Pin Num	Net Name	Ball Num
1	GND	—
2	GND	—
3	DIFF_CKP	A4
4	DIFF_DP1	A5
5	DIFF_CKN	B4
6	DIFF_DN1	B5
7	GND	—
8	GND	—
9	DIFF_DP0	A3
10	DIFF_DP2	A2
11	DIFF_DN0	B3
12	DIFF_DN2	B2
13	GND	—
14	GND	—
15	I2C_DIFF_SCL	T17
16	DIFF_DP3	A6
17	I2C_DIFF_SDA	T16
18	DIFF_DN3	B6
19	V3P3	—
20	GND	—
SH1	GND	—
SH2	GND	—

© 2021 Lattice Semiconductor Corp. All Lattice trademarks, registered trademarks, patents, and disclaimers are as listed at www.latticesemi.com/legal.
All other brand or product names are trademarks or registered trademarks of their respective holders. The specifications and information herein are subject to change without notice.

7. Status Indicators

The LED status indicators on the board show the application status. Table 7.1 lists the status LED I/O map.

Table 7.1. Status LED I/O Map

Net Name	LED	Connector/Pin	Color
LED0	D1	M6	Green
LED1	D2	M7	Green
LED2	D3	N6	Green
LED3	D4	N5	Green
LED4 – Red	D5	P2	RGB
LED4 – Green		P1	
LED4 – Blue		P3	
LED5 – Red	D6	R3	RGB
LED5 – Green		R4	
LED5 – Blue		P4	

8. Input Switches and Pushbuttons

Table 8.1 lists all the input switches and pushbuttons. This board has one 4 input slider switch and 5 pushbuttons.

Table 8.1. Switch and Pushbutton I/O Map

Net Name	Component	Connector/Pin
SWITCH0	SW1	AA15
SWITCH1	SW1	AB16
SWITCH2	SW1	AA16
SWITCH3	SW1	W16
PUSHBUTTON0	SW2	N1
PUSHBUTTON1	SW3	N2
GSRN	SW4	R5
PROGRAMN	SW5	C20

9. Ordering Information

This board is included as part of a kit, and not available as a separate item. The part number in Table 9.1 is for reference only, so it is clear which board is described in this document. Visit www.latticesemi.com/boards for the latest ordering information.

Table 9.1. Reference Part Number

Description	Ordering Part Number
CertusPro-NX Voice and Vision Machine Learning Board	LFCPNX-VVML-EVN

© 2021 Lattice Semiconductor Corp. All Lattice trademarks, registered trademarks, patents, and disclaimers are as listed at www.latticesemi.com/legal.
All other brand or product names are trademarks or registered trademarks of their respective holders. The specifications and information herein are subject to change without notice.

References

For more information, refer to CertusPro-NX Family Data Sheet (FPGA-DS-02086).

Technical Support Assistance

Submit a technical support case through www.latticesemi.com/techsupport.

© 2021 Lattice Semiconductor Corp. All Lattice trademarks, registered trademarks, patents, and disclaimers are as listed at www.latticesemi.com/legal.
All other brand or product names are trademarks or registered trademarks of their respective holders. The specifications and information herein are subject to change without notice.

Appendix A. CertusPro-NX Voice and Vision Machine Learning Board Schematics

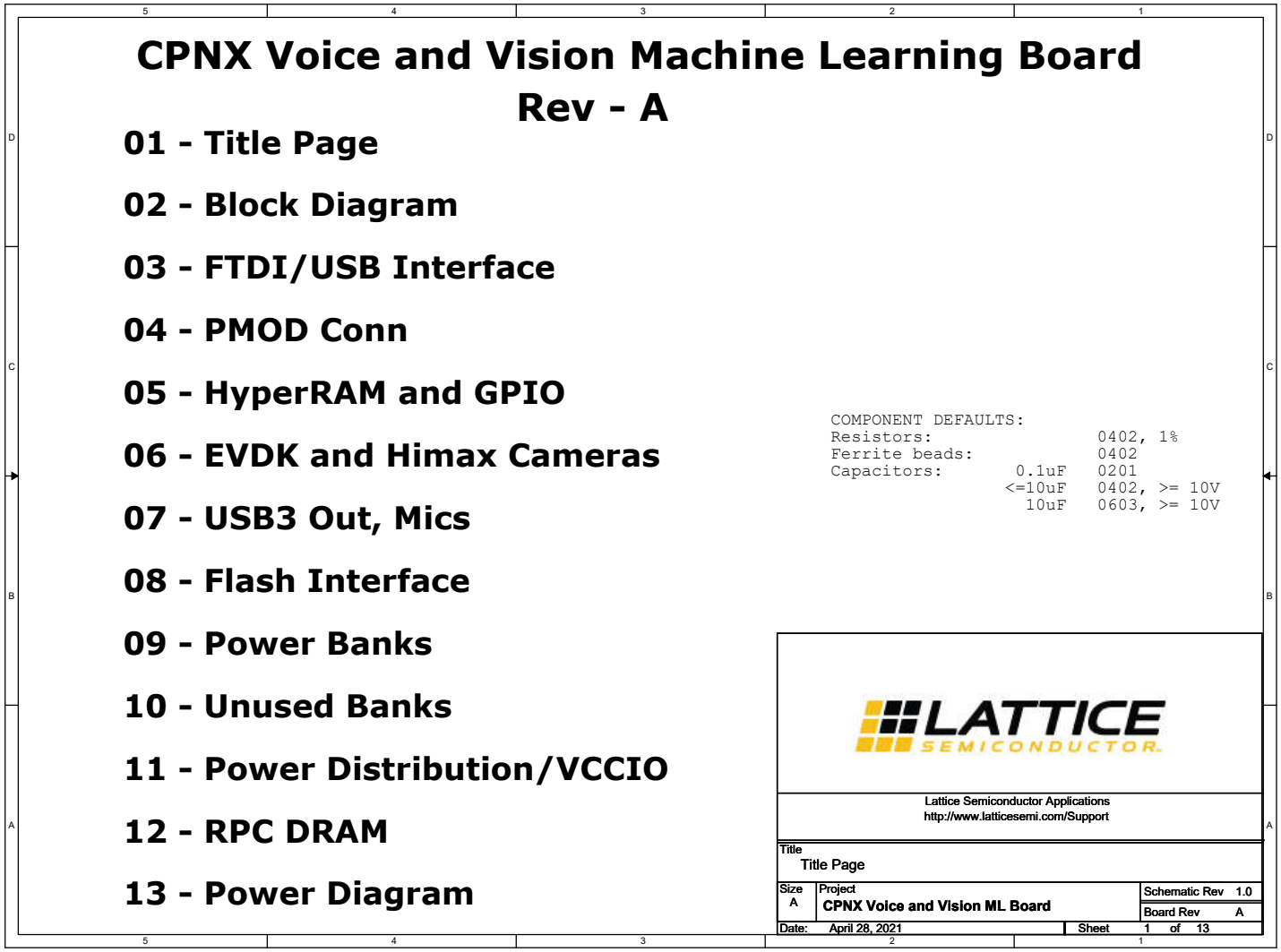

Figure A.1. Title Page

© 2021 Lattice Semiconductor Corp. All Lattice trademarks, registered trademarks, patents, and disclaimers are as listed at www.latticesemi.com/legal.
All other brand or product names are trademarks or registered trademarks of their respective holders. The specifications and information herein are subject to change without notice.

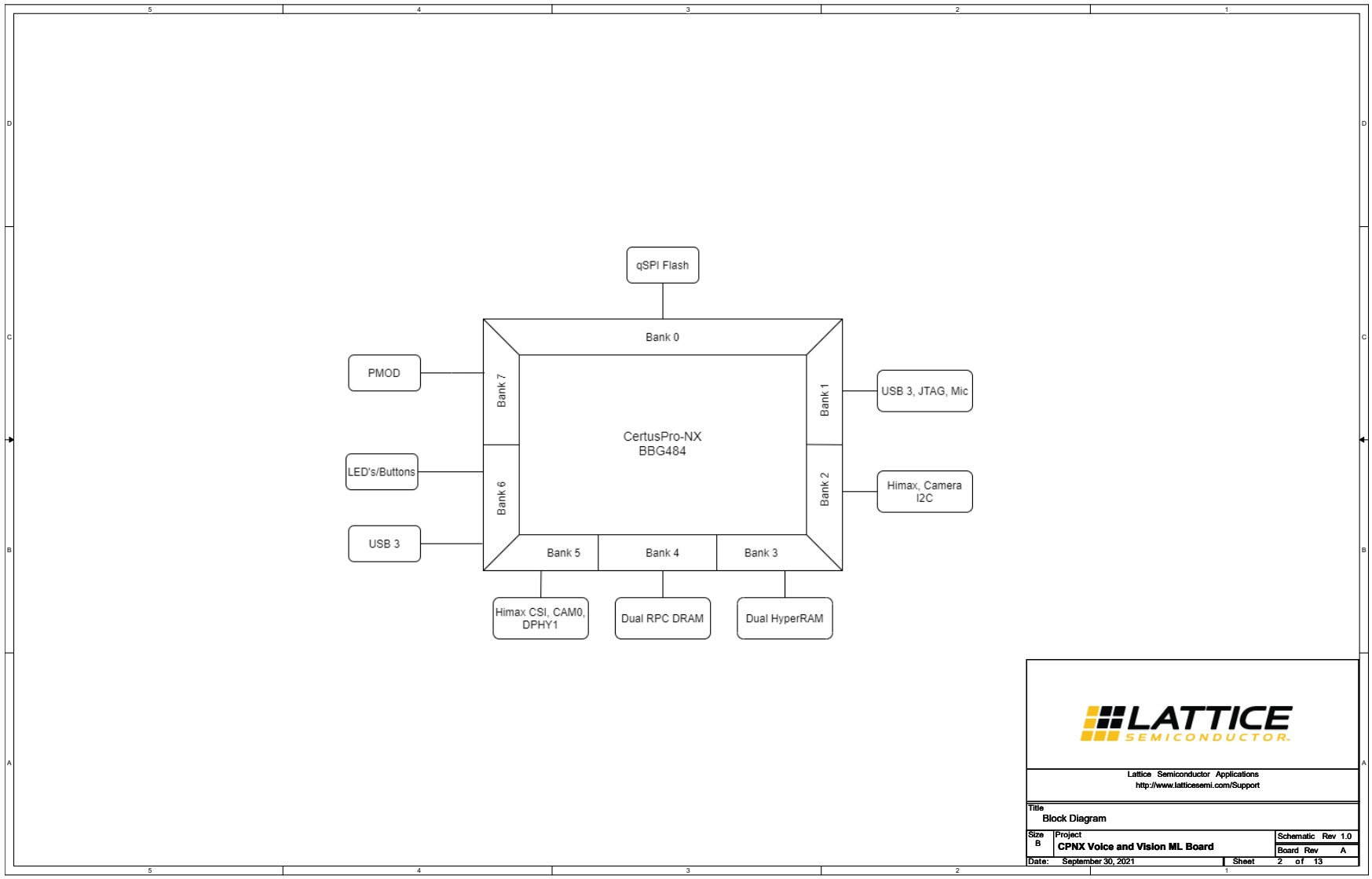

Figure A.2. Block Diagram

© 2021 Lattice Semiconductor Corp. All Lattice trademarks, registered trademarks, patents, and disclaimers are as listed at www.latticesemi.com/legal.
All other brand or product names are trademarks or registered trademarks of their respective holders. The specifications and information herein are subject to change without notice.

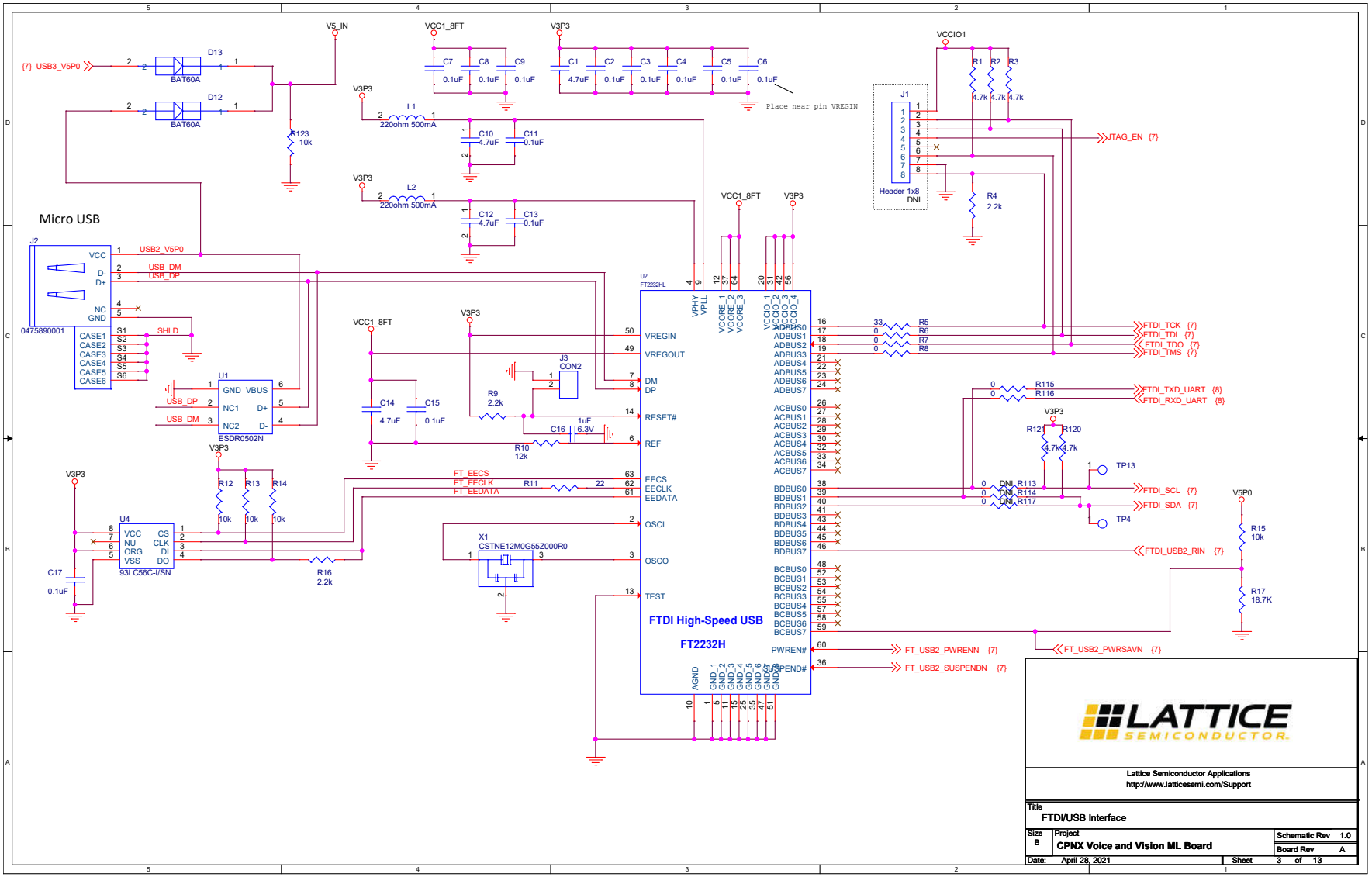

Figure A.3. FTDI/USB Interface

© 2021 Lattice Semiconductor Corp. All Lattice trademarks, registered trademarks, patents, and disclaimers are as listed at www.latticesemi.com/legal.
All other brand or product names are trademarks or registered trademarks of their respective holders. The specifications and information herein are subject to change without notice.

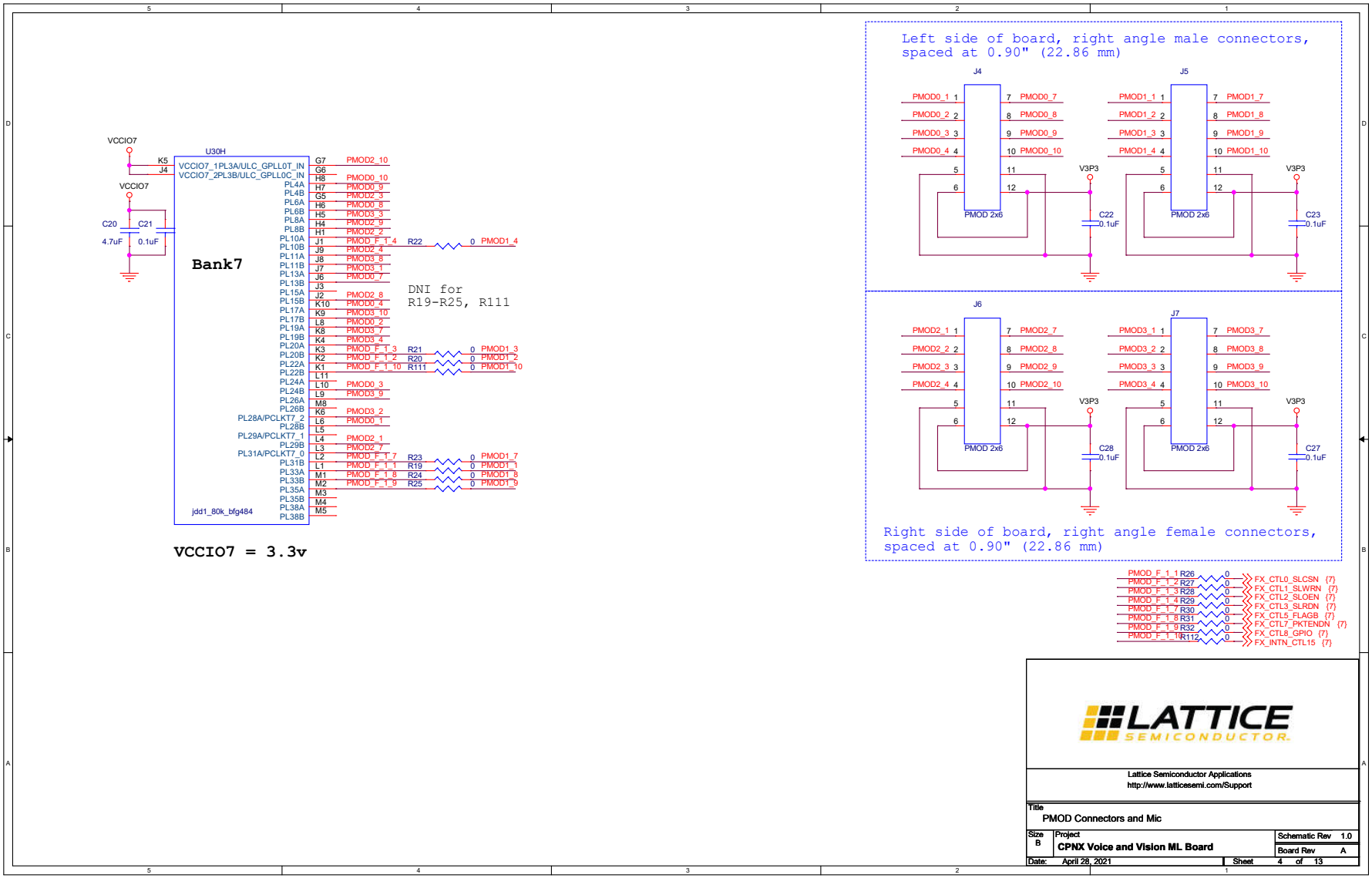

Figure A.4. PMOD Connectors and Mic

© 2021 Lattice Semiconductor Corp. All Lattice trademarks, registered trademarks, patents, and disclaimers are as listed at www.latticesemi.com/legal.
All other brand or product names are trademarks or registered trademarks of their respective holders. The specifications and information herein are subject to change without notice.

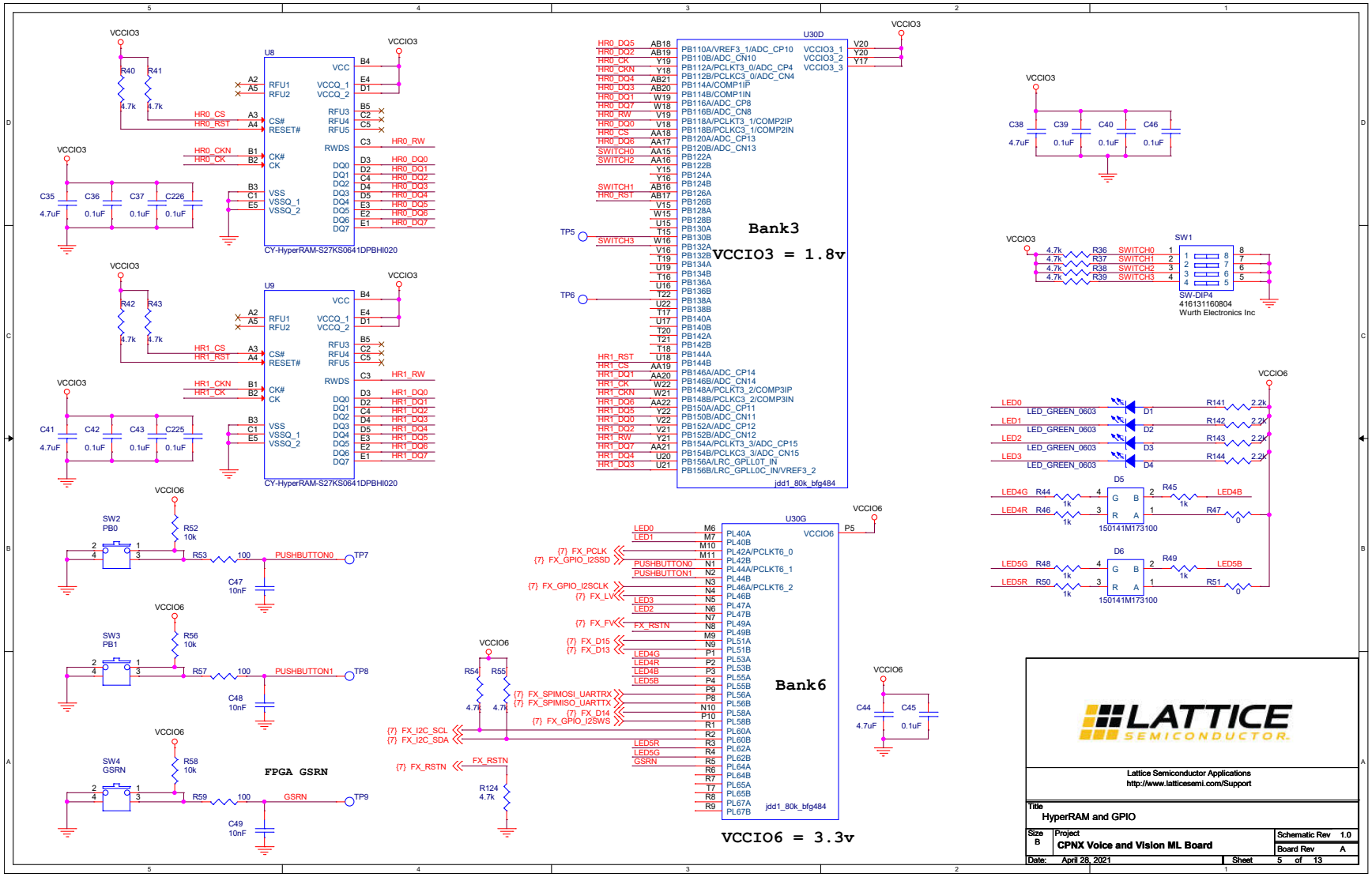

Figure A.5. HyperRAM and GPIO

© 2021 Lattice Semiconductor Corp. All Lattice trademarks, registered trademarks, patents, and disclaimers are as listed at www.latticesemi.com/legal.
All other brand or product names are trademarks or registered trademarks of their respective holders. The specifications and information herein are subject to change without notice.

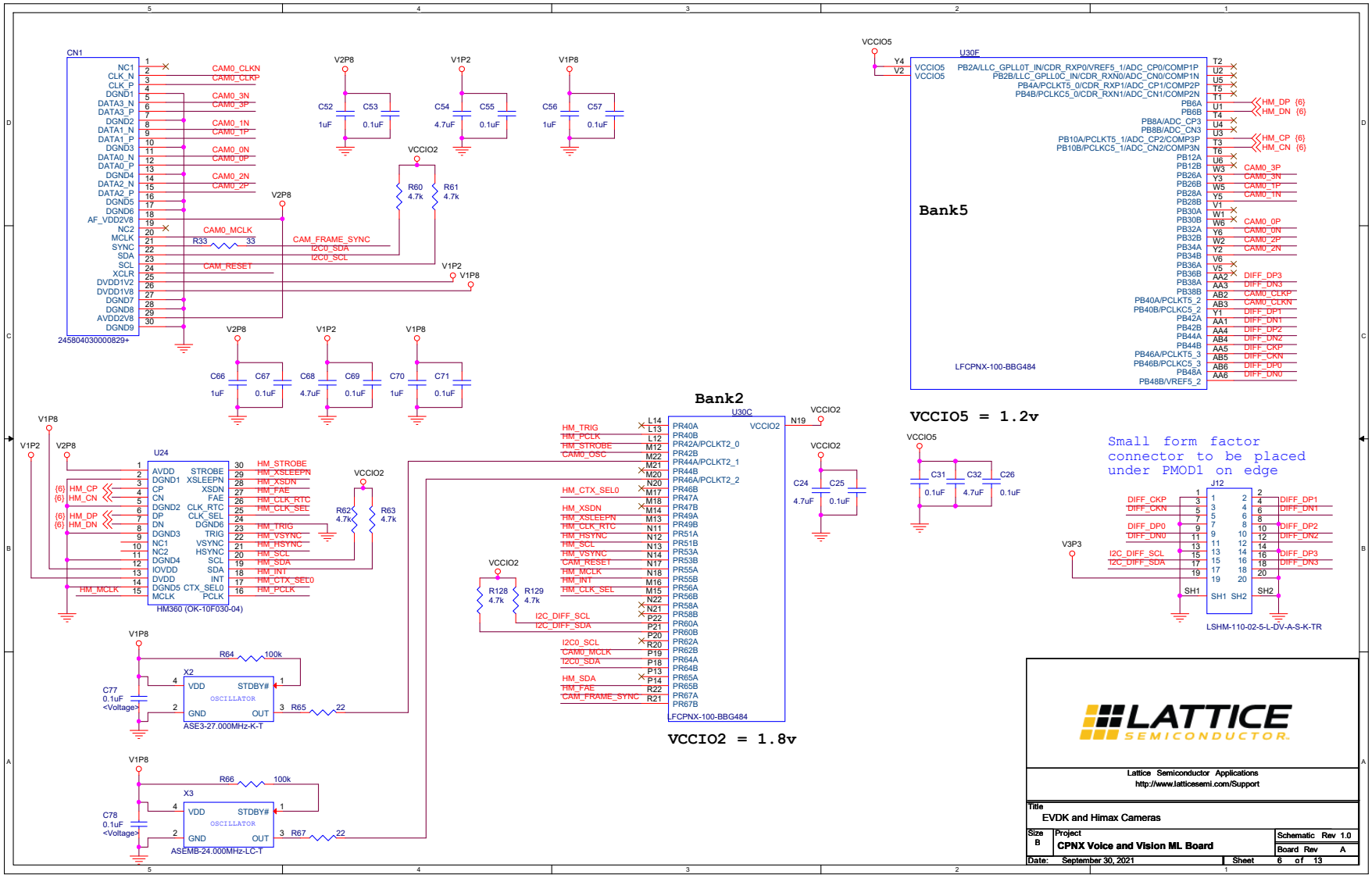

Figure A.6. EVDK and HiMax Cameras

© 2021 Lattice Semiconductor Corp. All Lattice trademarks, registered trademarks, patents, and disclaimers are as listed at www.latticesemi.com/legal.
All other brand or product names are trademarks or registered trademarks of their respective holders. The specifications and information herein are subject to change without notice.

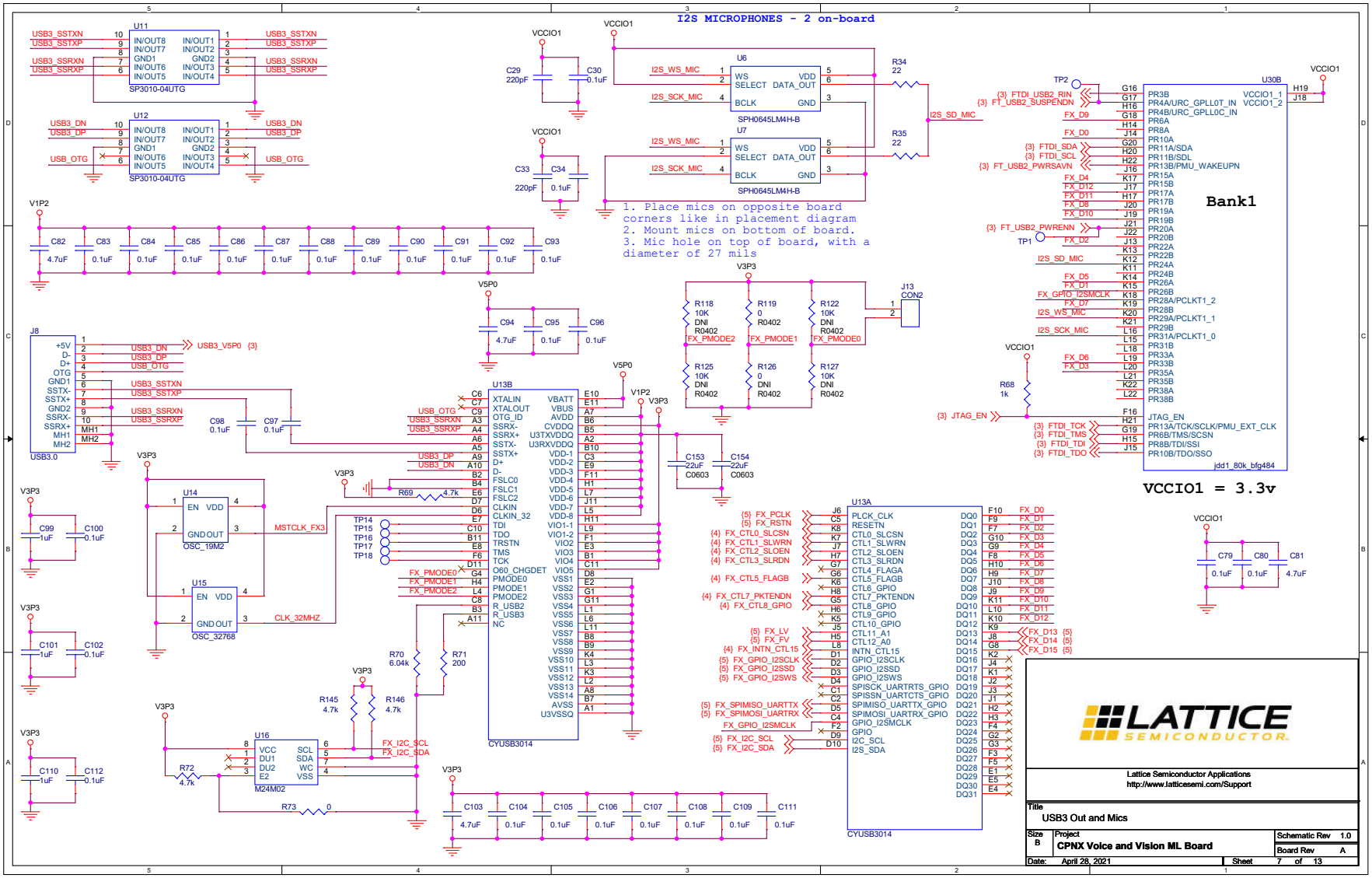

Figure A.7. USB3 Out

© 2021 Lattice Semiconductor Corp. All Lattice trademarks, registered trademarks, patents, and disclaimers are as listed at www.latticesemi.com/legal.
All other brand or product names are trademarks or registered trademarks of their respective holders. The specifications and information herein are subject to change without notice.

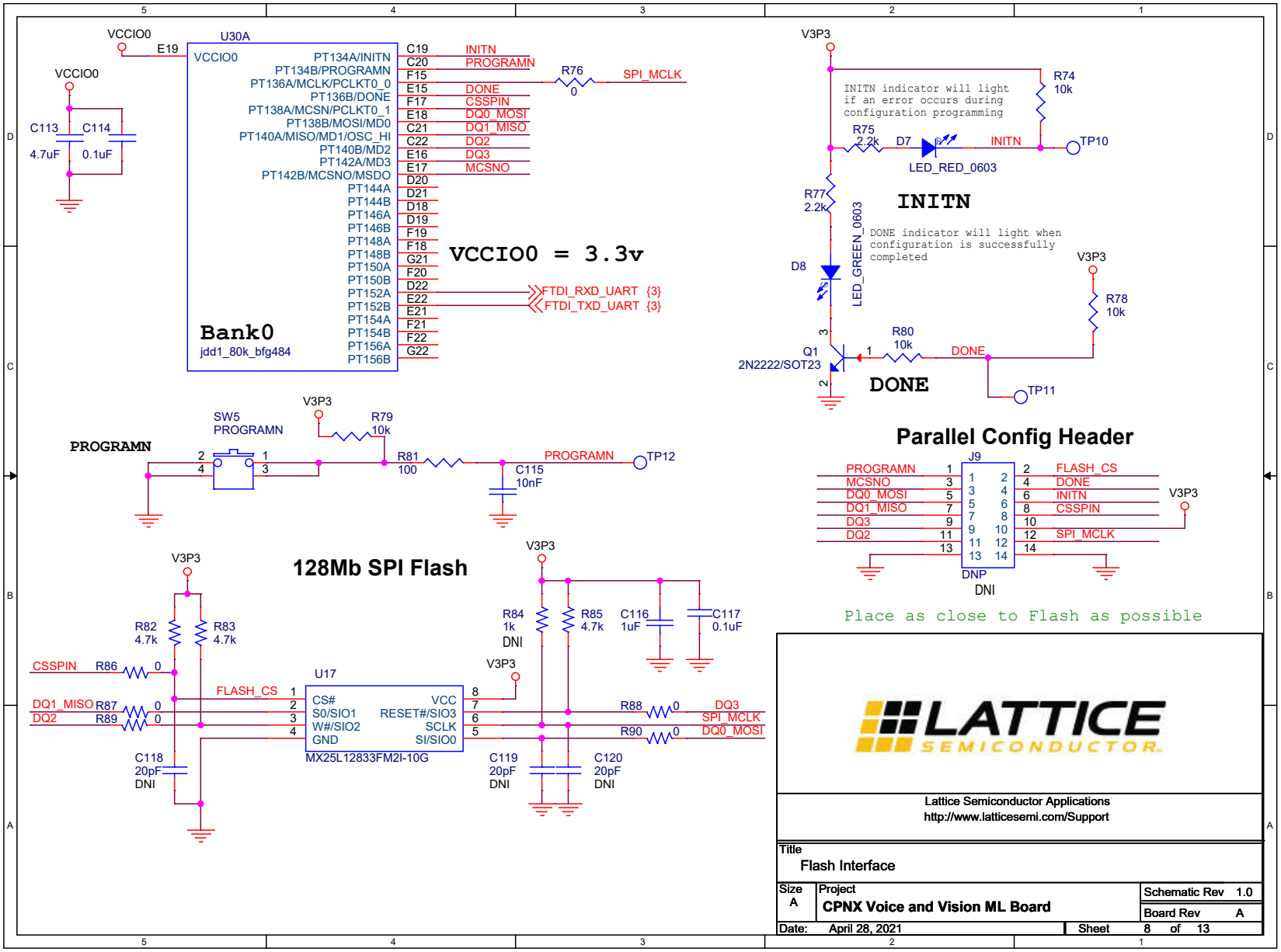

Figure A.8. Flash Interface

© 2021 Lattice Semiconductor Corp. All Lattice trademarks, registered trademarks, patents, and disclaimers are as listed at www.latticesemi.com/legal.
All other brand or product names are trademarks or registered trademarks of their respective holders. The specifications and information herein are subject to change without notice.

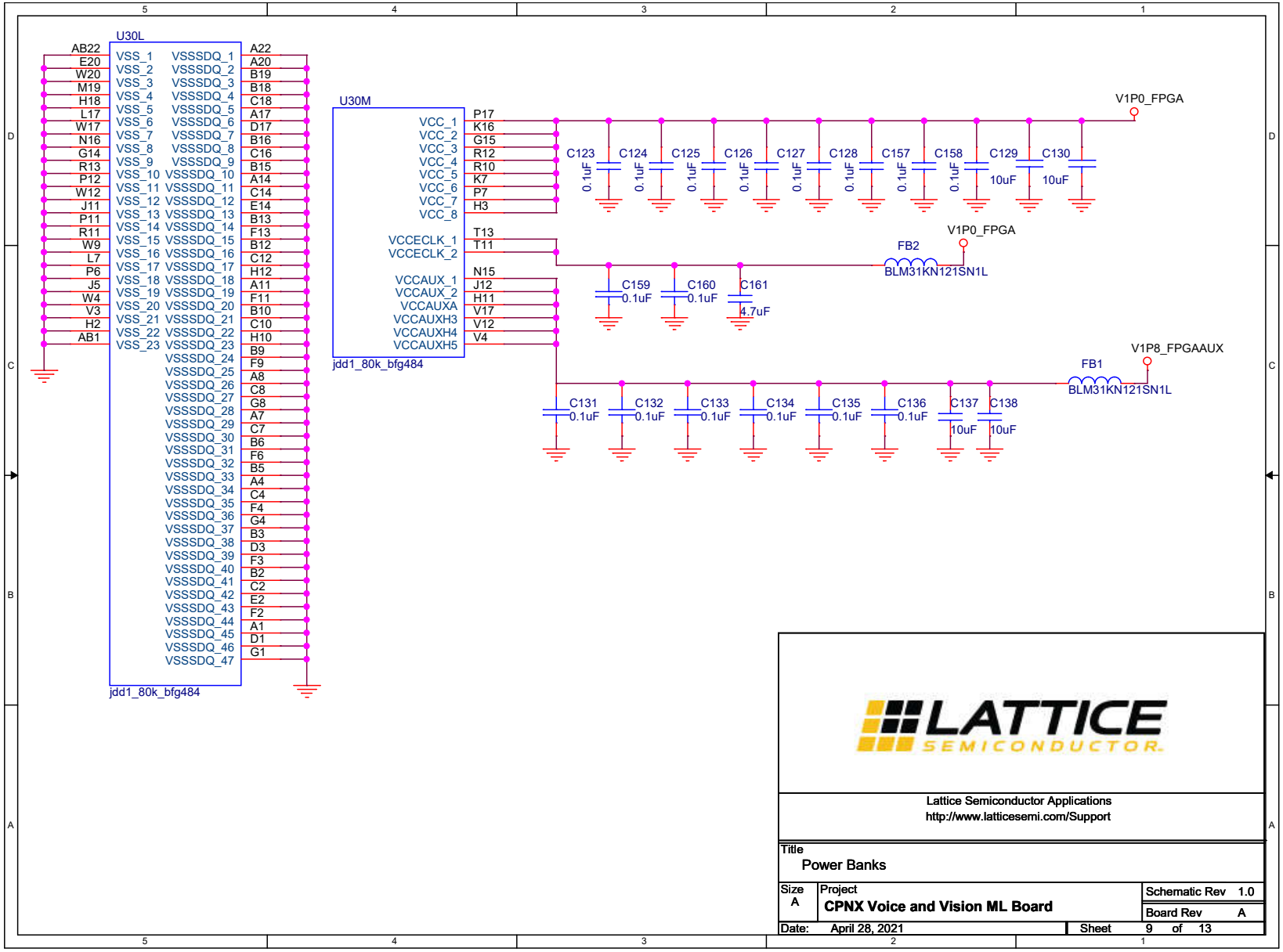

Figure A.9. Power Banks

© 2021 Lattice Semiconductor Corp. All Lattice trademarks, registered trademarks, patents, and disclaimers are as listed at www.latticesemi.com/legal.
All other brand or product names are trademarks or registered trademarks of their respective holders. The specifications and information herein are subject to change without notice.

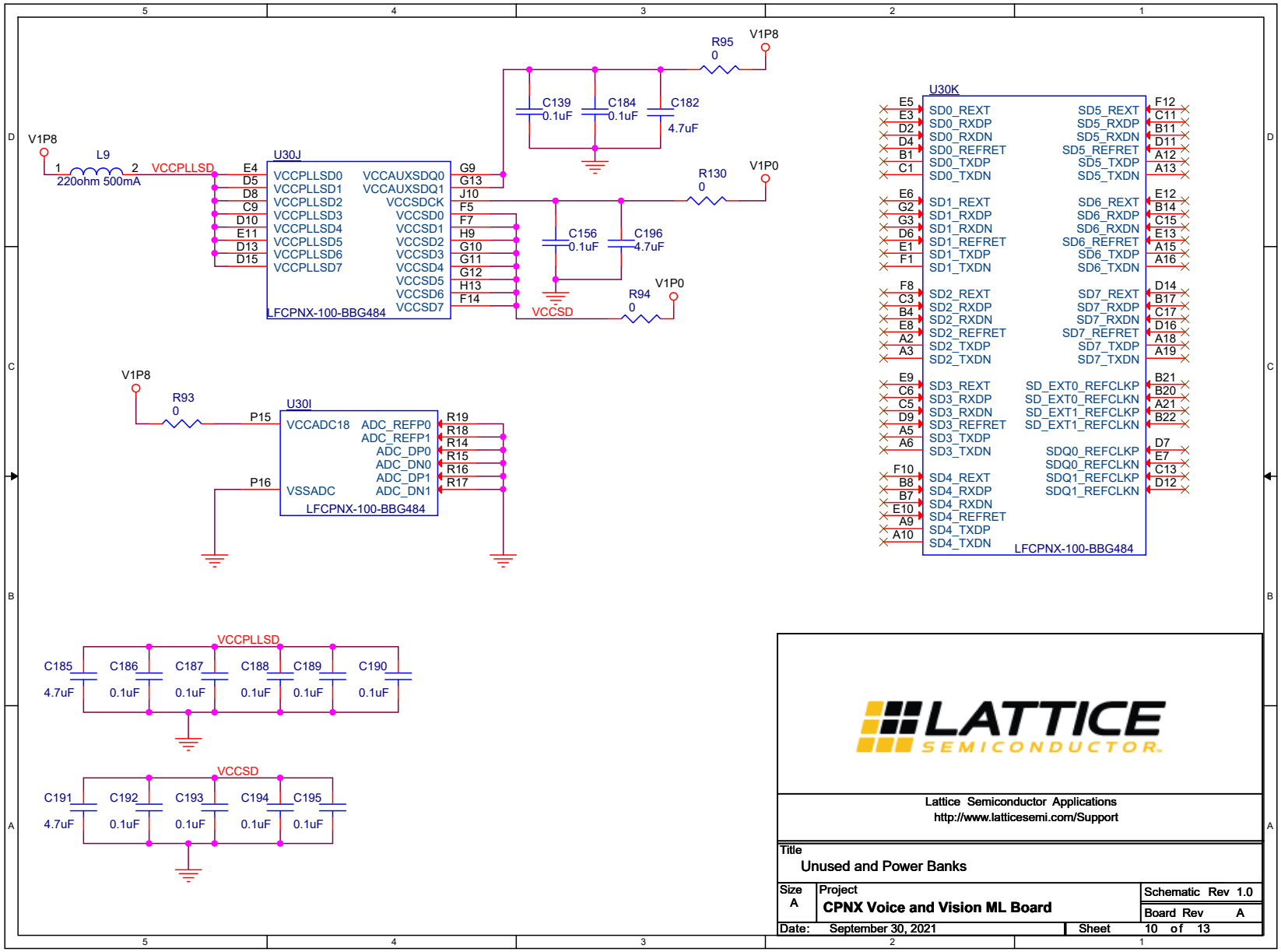

Figure A.10. Unused and Power Banks

© 2021 Lattice Semiconductor Corp. All Lattice trademarks, registered trademarks, patents, and disclaimers are as listed at www.latticesemi.com/legal.
All other brand or product names are trademarks or registered trademarks of their respective holders. The specifications and information herein are subject to change without notice.

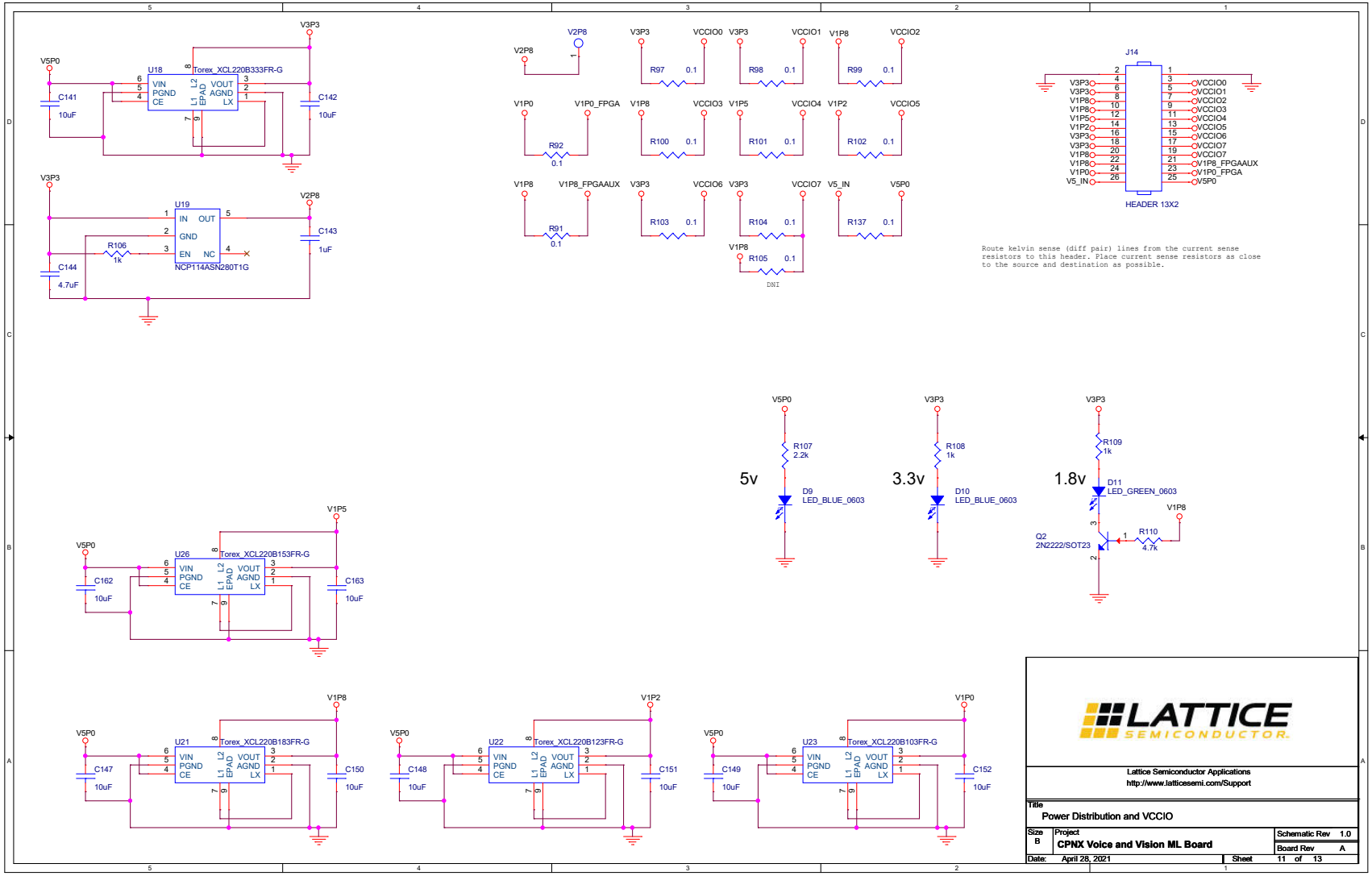

Figure A.11. Power Distribution and VCCIO

© 2021 Lattice Semiconductor Corp. All Lattice trademarks, registered trademarks, patents, and disclaimers are as listed at www.latticesemi.com/legal.
All other brand or product names are trademarks or registered trademarks of their respective holders. The specifications and information herein are subject to change without notice.

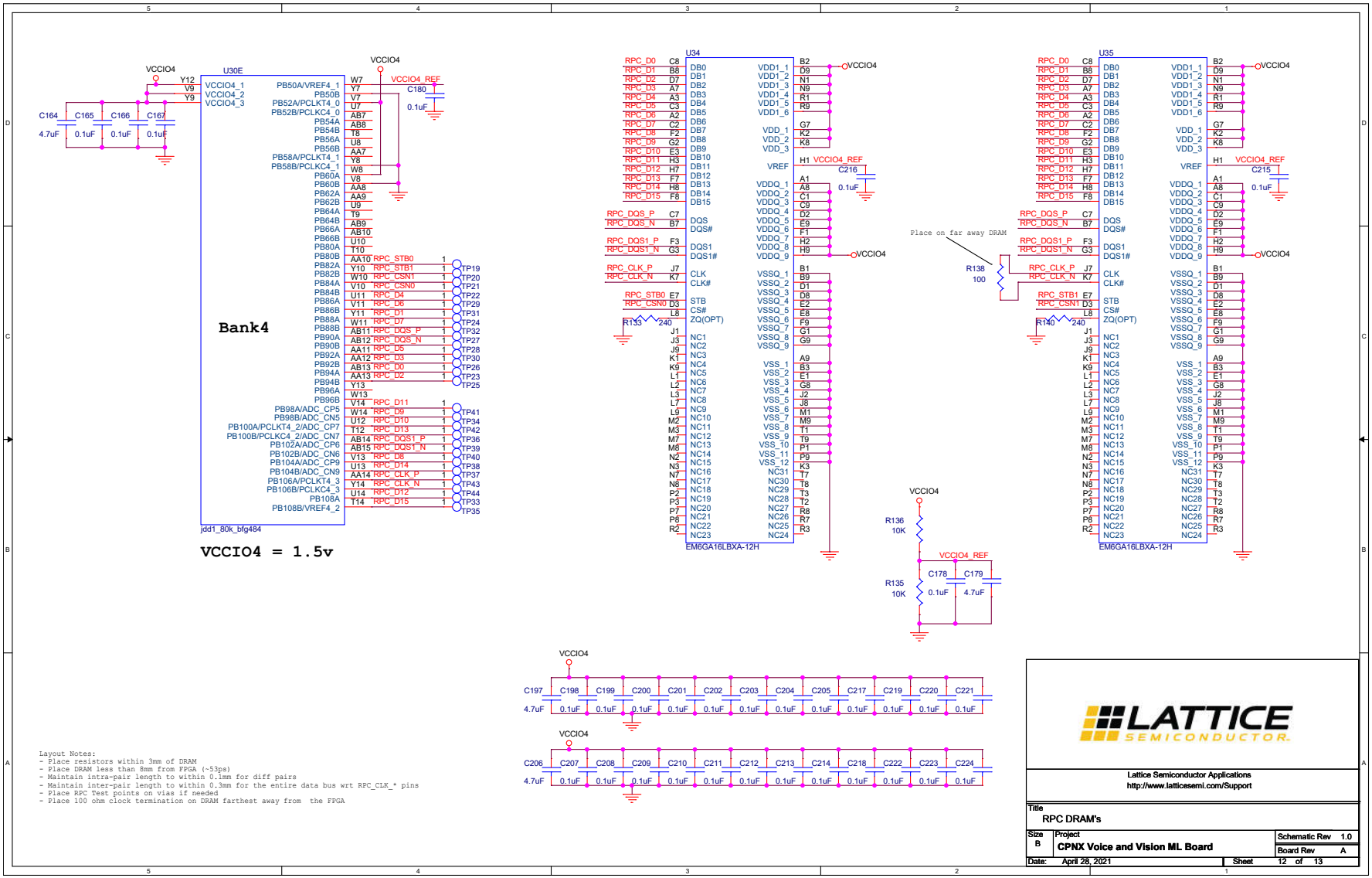

Figure A.12. RPC DRAMs

© 2021 Lattice Semiconductor Corp. All Lattice trademarks, registered trademarks, patents, and disclaimers are as listed at www.latticesemi.com/legal.
All other brand or product names are trademarks or registered trademarks of their respective holders. The specifications and information herein are subject to change without notice.

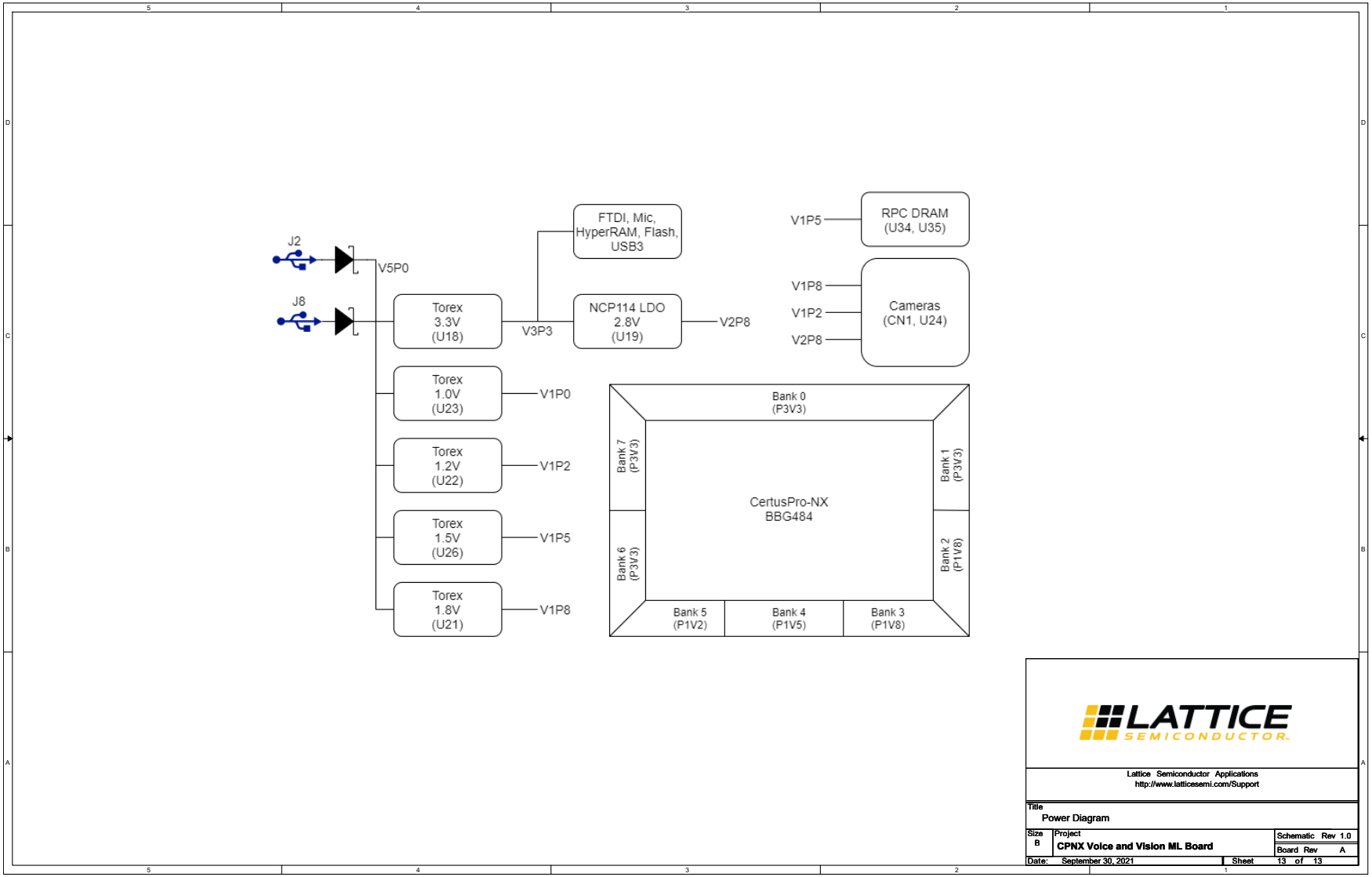

Figure A.13. Power Diagram

© 2021 Lattice Semiconductor Corp. All Lattice trademarks, registered trademarks, patents, and disclaimers are as listed at www.latticesemi.com/legal.
All other brand or product names are trademarks or registered trademarks of their respective holders. The specifications and information herein are subject to change without notice.

Appendix B. CertusPro-NX Voice and Vision Machine Learning Board Bill of Materials

Item	Reference	Qty	Part	Supplied By	PCB Footprint	Digikey P/N	Part Number	Manufacturer	Description
1	CN1	1	24580403000082 9+	—	camconn	478-12013-2-ND	2458040300008 29+	Kyocera International Inc	CONN RCPT 30POS SMD
2	C1,C10,C12,C14,C20,C24,C32, C35,C38,C41,C44,C54,C68,C81 ,C82,C94,C103,C113,C144,C16 1,C164,C179,C182,C185,C191, C196,C197,C206	28	4.7uF	—	C0402	445-13820-2-ND	C1005X5R1A475 K050BC-T	TDK	CAP CER 4.7UF 10V X5R 0402
3	C2,C3,C4,C5,C6,C7,C8,C9,C11, C13,C15,C17,C21,C22,C23,C25 ,C26,C27,C28,C30,C31,C34,C3 6,C37,C39,C40,C42,C43,C45,C 46,C53,C55,C57,C67,C69,C71, C77,C78,C79,C80,C83,C84,C85 ,C86,C87,C88,C89,C90,C91,C9 2,C93,C95,C96,C97,C98,C100, C102,C104,C105,C106,C107,C 108,C109,C111,C112,C114,C1 17,C123,C124,C125,C126,C12 7,C128,C131,C132,C133,C134, C135,C136,C139,C156,C157,C 158,C159,C160,C165,C166,C1 67,C178,C180,C181,C186,C18 7,C188,C189,C190,C192,C193, C194,C195,C198,C199,C200,C 201,C202,C203,C204,C205,C2 07,C208,C209,C210,C211,C21 2,C213,C214,C215,C216,C217, C218,C219,C220,C221,C222,C 223,C224,C225,C226	128	0.1uF	—	C0201	445-7313-2-ND	C0603X5R1C104 K030BC	TDK	CAP CER 0.1UF 16V X5R 0201
4	C16,C52,C56,C66,C70,C99,C10 1,C110,C116, C143	10	1uF	—	C0402	587-3709-2-ND	EMK105BJ105KV HF	Taiyo Yuden	CAP CER 1UF 16V X5R 0402
5	C29, C33	2	220pF	—	C0402	399-17376-2-ND	C0402C221J5GA CAUTO	KEMET	CAP CER 220PF 50V NP0 0402
6	C47,C48,C49,C115	4	10nF	—	C0402	445-7386-2-ND	C1005X5R1E103 K050BA	TDK	CAP CER 10000PF 25V X5R 0402

© 2021 Lattice Semiconductor Corp. All Lattice trademarks, registered trademarks, patents, and disclaimers are as listed at www.latticesemi.com/legal.
All other brand or product names are trademarks or registered trademarks of their respective holders. The specifications and information herein are subject to change without notice.

Item	Reference	Qty	Part	Supplied By	PCB Footprint	Digikey P/N	Part Number	Manufacturer	Description
7	C118,C119,C120	3	20pF	—	C0402	399-7773-2-ND	C0402C200J5GACTU	KEMET	CAP CER 20PF 50V C0G/NP0 0402
8	C129,C130,C137,C138,C142,C150,C151,C152,C163,C141,C147,C148,C149,C162	14	10uF	—	C0603	445-9065-2-ND	C1608X5R1C106M080AB	TDK Corporation	CAP CER 10UF 16V X5R 0603
9	C153, C154	2	22uF	—	C0603	1276-1193-6-ND	CL10A226MQ8NRNC	Samsung	CAP CER 22UF 6.3V X5R 0603
10	D1,D2,D3,D4,D8,D11	6	LED_GREEN_0603	—	APT1608	754-1116-2-ND	APT1608CGCK	Kingbright	LED GREEN CLEAR CHIP SMD
11	D5, D6	2	150141M173100	—	RGBOPT2	732-4998-2-ND	150141M173100	Wurth	LED RGB CLEAR 3528 SMD
12	D7	1	LED_RED_0603	—	APT1608	754-1123-2-ND	APT1608SURCK	Kingbright	LED RED CLEAR CHIP SMD
13	D9, D10	2	LED_BLUE_0603	—	APT1608	754-1434-2-ND	APT1608QBC/D	Kingbright	LED BLUE CLEAR CHIP SMD
14	D12. D13,	2	BAT60A	—	SOD323_BAT60A	BAT60AE6327HTSA1TR-ND	BAT60AE6327HTSA1	Infineon Technologies	DIODE SCHOTTKY 10V 3A SOD323-2
15	FB1. FB2	2	BLM31KN121SN1L	—	BLM41P	490-16524-2-ND	BLM31KN121SN1L	Murata Electronics	FERRITE BEAD 120 OHM 1206 1LN
16	J1	1	Header 1x8	—	hdr_amp_87220_8_1x8_100	WM50017-08-ND	0022284081	Molex	CONN HEADER 8POS .100 VERT TIN
17	J2	1	475890001	—	MOLEX_47589-0001	WM17143TR-ND	0475890001	Molex	CONN RCPT MICRO USB AB 5P SMD RA
18	J3, J13,	2	CON2	—	CON2	732-5315-ND	61300211121	Würth Elektronik	CONN HEADER VERT 2POS 2.54MM
19	J4, J5	2	PMOD 2x6	—	skt_sullins_PBC06DBAN	S2111E-06-ND	PBC06DBAN	Sullins	CONN HEADER R/A 12POS 2.54MM
20	J6, J7	2	PMOD 2x6	—	skt_sullins_PPPC062LJBN-RC	S5559-ND	PPPC062LJBN-RC	Sullins	CONN HDR 12POS 0.1 GOLD PCB R/A

© 2021 Lattice Semiconductor Corp. All Lattice trademarks, registered trademarks, patents, and disclaimers are as listed at www.latticesemi.com/legal.
All other brand or product names are trademarks or registered trademarks of their respective holders. The specifications and information herein are subject to change without notice.

Item	Reference	Qty	Part	Supplied By	PCB Footprint	Digikey P/N	Part Number	Manufacturer	Description
21	J8	1	USB3.0	—	USB3_MicroB_Type3	GSB343K33HRTR-ND	GSB343K33HR	Amphenol	CONN RCPT USB3.0 MICRO B SMD R/A
22	J9	1	DNP	—	Header_2x7	—	Header_2x7	—	—
23	J12	1	LSHM-110-02-5-L-DV-A-S-K-TR	—	LSHM-110_DV	SAM14955TR-ND	LSHM-110-02.5-L-DV-A-S-K-TR	Samtec Inc.	CONN SELF-MATE 20POS SMD GOLD
24	J14	1	Header 12x2	—	HEADER24_100 MIL	SAM1034-12-ND	TSW-112-07-T-D	Samtec Inc.	CONN HEADER VERT 24POS 2.54MM
25	L1, L2, L9	3	220ohm 500mA	—	FB0402	445-9329-2-ND	MPZ1005S221ET000	TDK Corporation	FERRITE BEAD 220 OHM 0402 1LN
26	Q1, Q2	2	2N2222/SOT23	—	MMBT2222ALT-1	MMBT2222ALT1HTSA1TR-ND	MMBT2222ALT1HTSA1	Infineon Technologies	TRANS NPN 40V 0.6A SOT-23
27	R1,R2,R3,R36,R37,R38,R39,R40,R41,R42,R43,R54,R55,R60,R61,R62,R63,R69,R72,R82,R83,R85,R110,R120,R121,R124,R128,R129,R145,R146	30	4.7k	—	R0402	311-4.7KLRTR-ND	RC0402FR-074K7L	Yageo	RES SMD 4.7K OHM 1% 1/16W 0402
28	R4,R9,R16,R75,R77,R107,R141,R142,R143,R144	10	2.2k	—	R0402	311-2.20KLRTR-ND	RC0402FR-072K2L	Yageo	RES SMD 2.2K OHM 1% 1/16W 0402
29	R5, R33	2	33	—	R0402	311-33.0LRTR-ND	RC0402FR-0733RL	Yageo	RES SMD 33 OHM 1% 1/16W 0402
30	R6,R7,R8,R19,R20,R21,R22,R23,R24,R25,R26,R27,R28,R29,R30,R31,R32,R47,R51,R73,R76,R86,R87,R88,R89,R90,R93,R94,R95,R111,R112,R113,R114,R115,R116,R117,R119,R126,R130	39	0	—	R0402	311-0.0JRTR-ND	RC0402JR-070RL	Yageo	RES SMD 0 OHM JUMPER 1/16W 0402
31	R10	1	12k	—	R0402	311-12.0KLRTR-ND	RC0402FR-0712KL	Yageo	RES SMD 12K OHM 1% 1/16W 0402
32	R11,R34,R35,R65,R67	5	22	—	R0402	311-22.0LRTR-ND	RC0402FR-0722RL	Yageo	RES SMD 22 OHM 1% 1/16W 0402

© 2021 Lattice Semiconductor Corp. All Lattice trademarks, registered trademarks, patents, and disclaimers are as listed at www.latticesemi.com/legal.
All other brand or product names are trademarks or registered trademarks of their respective holders. The specifications and information herein are subject to change without notice.

Item	Reference	Qty	Part	Supplied By	PCB Footprint	Digikey P/N	Part Number	Manufacturer	Description
33	R12,R13,R14,R15,R52,R56,R58,R74,R78,R79,R80,R118,R122,R123,R125,R127,R135,R136	18	10k	—	R0402	311-10.0KLRTR-ND	RC0402FR-0710KL	Yageo	RES SMD 10K OHM 1% 1/16W 0402
34	R17	1	18.7k	—	R0402	YAG3018TR-ND	RC0402FR-0718K7L	Yageo	RES SMD 18.7K OHM 1% 1/16W 0402
35	R44,R45,R46,R48,R49,R50,R68,R84,R106,R108,R109	11	1k	—	R0402	311-1.00KLRTR-ND	RC0402FR-071KL	Yageo	RES SMD 1K OHM 1% 1/16W 0402
36	R53,R57,R59,R81,R138	5	100	—	R0402	311-100LRTR-ND	RC0402FR-07100RL	Yageo	RES SMD 100 OHM 1% 1/16W 0402
37	R64, R66	2	100k	—	R0402	311-100KLRTR-ND	RC0402FR-07100KL	Yageo	RES SMD 100K OHM 1% 1/16W 0402
38	R70	1	6.04k	—	R0402	YAG2293TR-ND	RC0402FR-07100KL	Yageo	RES SMD 100K OHM 1% 1/16W 0402
39	R71	1	200	—	R0402	311-200LRTR-ND	RC0402FR-07200RL	Yageo	RES SMD 200 OHM 1% 1/16W 0402
40	R91,R92,R97,R98,R99,R100,R101,R102,R103,R104,R105	12	0.1	—	R0402	P.10AKTR-ND	ERJ-2BSFR10X	Panasonic	RES 0.1 OHM 1% 1/6W 0402
41	R133, R140	2	240	—	R0402	311-240LRTR-ND	RC0402FR-07240RL	Yageo	RES SMD 240 OHM 1% 1/16W 0402
42	R134,R139	2	49.9	—	R0402	311-49.9LRTR-ND	RC0402FR-0749R9L	Yageo	RES SMD 49.9 OHM 1% 1/16W 0402
43	SW1	1	SW-DIP4	—	416131160804	CT1954MST-ND	416131160804	Wurth Electronics Inc	SWITCH SLIDE DIP SPST 25MA 24V
44	SW2	1	PB0	—	4psmd_switch	732-10143-2-ND	434153017835	Wurth Electronics Inc	SWITCH TACTILE SPST-NO 0.05A 12V
45	SW3	1	PB1	—	4psmd_switch	732-10143-2-ND	434153017835	Wurth Electronics Inc	SWITCH TACTILE SPST-NO 0.05A 12V

© 2021 Lattice Semiconductor Corp. All Lattice trademarks, registered trademarks, patents, and disclaimers are as listed at www.latticesemi.com/legal.
All other brand or product names are trademarks or registered trademarks of their respective holders. The specifications and information herein are subject to change without notice.

Item	Reference	Qty	Part	Supplied By	PCB Footprint	Digikey P/N	Part Number	Manufacturer	Description
46	SW4	1	GSRN	—	4psmd_switch	732-10143-2-ND	434153017835	Wurth Electronics Inc	SWITCH TACTILE SPST-NO 0.05A 12V
47	SW5	1	PROGRAMN	—	4psmd_switch	732-10143-2-ND	434153017835	Wurth Electronics Inc	SWITCH TACTILE SPST-NO 0.05A 12V
48	TP1,TP2,TP4,TP5,TP6,TP7,TP8,TP9,TP10,TP11,TP12,TP13,TP14,TP15,TP16,TP17,TP18,TP19,TP20,TP21,TP22,TP23,TP24,TP25,TP26,TP27,V2P8,TP28,TP29,TP30,TP31,TP32,TP33,TP34,TP35,TP36,TP37,TP38,TP39,TP40,TP41,TP42,TP43,TP44	44	Testpoint	—	tp35_smd	—	—	—	—
49	U1	1	ESDR0502N	—	ESDR0502N	2156-ESDR0502NMUTBG-OS-ND	ESDR0502NMUTBG	ON Semiconductor	TVS DIODE 5.5VWM 6UDFN
50	U2	1	FT2232HL	—	tqfp64_0p5_12p2x12p2_h1p6	768-1024-1-ND	FT2232HL	FTDI	IC USB HS DUAL UART/FIFO 64-LQFP
51	U4	1	93LC56C-I/SN	—	so8_50_244	93LC56C-I/SN-ND	93LC56C-I/SN	Microchip	IC EEPROM 2KBIT SPI 3MHZ 8SOIC
52	U6, U7	2	SPH0645LM4H-B	—	SPH0645LM4H-B	423-1405-2-ND	SPH0645LM4H-B	Knowles	CRAWFORD MIC DGT I^2S BOTTOM PORT
53	U8, U9	2	S27KS0641DPBHI020	—	24FBGA_S27KS	428-3858-ND	S27KS0641DPBHI020	Cypress	IC ARM9 USB CONTROLLER 121FBGA
54	U11, U12	2	SP3010-04UTG	—	UDFN10_SP3010-04UTG	F3507TR-ND	SP3010-04UTG	Littlefuse In.	TVS DIODE 6V 12.3V 10UDFN
55	U13	1	CYUSB3014	—	121BGA	428-3130-ND	CYUSB3014-BZXI	Cypress	IC ARM9 USB CONTROLLER 121FBGA
56	U14	1	OSC_19M2	—	7X-19p200MBA-T	887-1400-2-ND	7X-19.200MBA-T	TXC Corporation	XTAL OSC XO 19.2000MHZ CMOS SMD

© 2021 Lattice Semiconductor Corp. All Lattice trademarks, registered trademarks, patents, and disclaimers are as listed at www.latticesemi.com/legal.
All other brand or product names are trademarks or registered trademarks of their respective holders. The specifications and information herein are subject to change without notice.

Item	Reference	Qty	Part	Supplied By	PCB Footprint	Digikey P/N	Part Number	Manufacturer	Description
57	U15	1	OSC_32768	—	ASAK-32p768KHZ-LRS-T	535-13275-2-ND	ASAK-32.768KHZ-LRS-T	Abracon LLC	XTAL OSC XO 32.7680KHZ LVCMOS
58	U16	1	M24M02	—	SOIC8_M24M02-DWMN3TP_K	497-16238-2-ND	M24M02-DWMN3TP/K	STMicroelectronics	IC EEPROM 2MBIT I2C 1MHZ 8SO
59	U17	1	MX25L12833FM2I-10G	—	SO8_MX25L12833FM2I10G	1092-1228-ND	MX25L12833FM2I-10G	Macronix	IC FLASH 128MBIT 104MHZ 8SOP
60	U18	1	Torex_XCL220B333FR-G	—	XCL220B123FR-G	893-1279-2-ND	XCL220B333FR-G	Torex Semiconductor Ltd	DC DC CONVERTER 3.3V
61	U19	1	NCP114ASN280T1G	—	TSOP5_NCP114ASN280T1G	NCP114ASN280T1GOSTR-ND	NCP114ASN280T1G	ON Semiconductor	IC REG LINEAR 2.8V 300MA 5TSOP
62	U21	1	Torex_XCL220B183FR-G	—	XCL220B123FR-G	893-1275-2-ND	XCL220B183FR-G	Torex Semiconductor Ltd	DC DC CONVERTER 1.8V
63	U22	1	Torex_XCL220B123FR-G	—	XCL220B123FR-G	893-1273-2-ND	XCL220B123FR-G	Torex Semiconductor Ltd	DC DC CONVERTER 1.2V
64	U23	1	Torex_XCL220B103FR-G	—	XCL220B123FR-G	893-1272-2-ND	XCL220B103FR-G	Torex Semiconductor Ltd	DC DC CONVERTER 1V 1A
65	U24	1	HM360 (OK-10F030-04)	—	OK_10F030_04	—	OK-10F030-04	Himax	Female Connector to mate with Male connector on Compact Camera Module
66	U26	1	Torex_XCL220B153FR-G	—	XCL220B123FR-G	893-1274-2-ND	XCL220B153FR-G	Torex Semiconductor Ltd	DC DC CONVERTER 1.5V
67	U30	1	LFCPNX-1008BBG484C	Lattice Supplied	lattice-caBGA484_1900X1900	—	LFCPNX-1008BBG484C	Lattice Semiconductor	CertusPro-NX-100
68	U34, U35	2	EM6GA16LBXA-12H	—	FBGA96_900X1300	2174-EM6GA16LBXA-12HTR-ND	EM6GA16LBXA-12H	Etron Technology, Inc.	256M BIT RPC DRAM (FBGA 96 BALLS

© 2021 Lattice Semiconductor Corp. All Lattice trademarks, registered trademarks, patents, and disclaimers are as listed at www.latticesemi.com/legal.
All other brand or product names are trademarks or registered trademarks of their respective holders. The specifications and information herein are subject to change without notice.

Item	Reference	Qty	Part	Supplied By	PCB Footprint	Digikey P/N	Part Number	Manufacturer	Description
69	X1	1	CSTNE12M0G55Z000R0	—	SC_CSTNE12M0G55Z000R0	490-17945-2-ND	CSTNE12M0G55Z000R0	Murata Electronics	CERAMIC RES 12.0000MHZ 33PF SMD
70	X2	1	ASE3-27.000MHz-K-T	—	27MHZ	535-9551-2-ND	ASE3-27.000MHz-K-T	ABRACON	XTAL OSC XO 27.0000MHZ CMOS SMD
71	X3	1	ASEMB-24.000MHz-LC-T	—	ASEMB_24p000MHz_LC_T	535-11748-2-ND	ASEMB-24.000MHz-LC-T	ABRACON	MEMS OSC XO 24.0000MHZ CMOS SMD

© 2021 Lattice Semiconductor Corp. All Lattice trademarks, registered trademarks, patents, and disclaimers are as listed at www.latticesemi.com/legal.
All other brand or product names are trademarks or registered trademarks of their respective holders. The specifications and information herein are subject to change without notice.

Revision History

Revision 1.0, October 2021

Section	Change Summary
All	Initial release.

© 2021 Lattice Semiconductor Corp. All Lattice trademarks, registered trademarks, patents, and disclaimers are as listed at www.latticesemi.com/legal.
All other brand or product names are trademarks or registered trademarks of their respective holders. The specifications and information herein are subject to change without notice.

www.latticesemi.com