CrossLink LIF-MD6000 Master Link Board - Revision E

Evaluation Board User Guide

FPGA-EB-02027-1.1

May 2023

Disclaimers

Lattice makes no warranty, representation, or guarantee regarding the accuracy of information contained in this document or the suitability of its products for any particular purpose. All information herein is provided AS IS, with all faults and associated risk the responsibility entirely of the Buyer. Buyer shall not rely on any data and performance specifications or parameters provided herein. Products sold by Lattice have been subject to limited testing and it is the Buyer's responsibility to independently determine the suitability of any products and to test and verify the same. No Lattice products should be used in conjunction with mission- or safety-critical or any other application in which the failure of Lattice's product could create a situation where personal injury, death, severe property or environmental damage may occur. The information provided in this document is proprietary to Lattice Semiconductor, and Lattice reserves the right to make any changes to the information in this document or to any products at any time without notice.

© 2020-2023 Lattice Semiconductor Corp. All Lattice trademarks, registered trademarks, patents, and disclaimers are as listed at www.latticesemi.com/legal.
All other brand or product names are trademarks or registered trademarks of their respective holders. The specifications and information herein are subject to change without notice.

Contents

Acronyms in This Document 5
1. Introduction 6
2. Headers and Test Connections 8
3. Programming Circuit 9
3.1. Bridging Circuit 9
3.2. I^2C Expander 10
4. Power Supply 11
5. Status Indicators 13
6. SMA I/O Link Board 14
7. Breakout I/O Link Board 16
8. Ordering Information 19
References 20
Technical Support Assistance 21
Appendix A. LIF-MD6000-ML-EVN-BRD Schematics 22
Appendix B. LIF-MD6000-ML-EVN-BRD Bill of Materials 30
Appendix C. SMA-IOL-EVN-BRD Schematics 36
Appendix D. SMA-IOL-EVN-BRD Bill of Materials 37
Appendix E. B-IOL-EVN-BRD Schematics 38
Appendix F. B-IOL-EVN-BRD Bill of Materials 39
Revision History 40

© 2020-2023 Lattice Semiconductor Corp. All Lattice trademarks, registered trademarks, patents, and disclaimers are as listed at www.latticesemi.com/legal.
All other brand or product names are trademarks or registered trademarks of their respective holders. The specifications and information herein are subject to change without notice.

Figures

Figure 1.1. Top View of Master Link Rev E Board and its Key Components 6
Figure 1.2. Bottom View of Master Link Rev E Board 7
Figure 3.1. Programming Block 9
Figure 3.2. Bridging Block 10
Figure 3.3. I^2C Expander Block 10
Figure 4.1. Power Supply Block 11
Figure 6.1. Top View of SMA I/O Link Board 15
Figure 6.2. Bottom View of SMA I/O Link Board 15
Figure 7.1. Top View of Breakout I/O Link Board 18
Figure 7.2. Bottom View of Breakout I/O Link Board 18
Figure A.1. LIF-MD6000 Master Link Rev E Board Block Diagram 22
Figure A.2. FTDI Interface 23
Figure A.3. Power Regulator Interface 24
Figure A.4. MIPI Block – MIPI Tx 25
Figure A.5. Bank 1, 2 – LVDS Rx 26
Figure A.6. Bank0, Flash Interface 27
Figure A.7. I^2C Expander 28
Figure A.8. Layout Guidelines 29
Figure C.1. SMA Debug Board 36
Figure E.1. 100MILS_DEBUG Header 38

Tables

Table 2.1. Headers and Test Connectors 8
Table 4.1. Power LEDs 11
Table 4.2. Device Power Rail Summary and Test Points 12
Table 5.1. Status LED I/O Map 13
Table 6.1. Headers and Test Connectors 14
Table 6.2. U1 Connector Description 14
Table 7.1. Headers and Test Connectors 16
Table 7.2. U1 Connector Description 16
Table 7.3. J2 Header Description 17
Table 8.1. Ordering Information 19

© 2020-2023 Lattice Semiconductor Corp. All Lattice trademarks, registered trademarks, patents, and disclaimers are as listed at www.latticesemi.com/legal.
All other brand or product names are trademarks or registered trademarks of their respective holders. The specifications and information herein are subject to change without notice.

Acronyms in This Document

A list of acronyms used in this document.

Acronym	Definition
CMOS	Complementary Metal-Oxide Semiconductor
CSI-2	Camera Serial Interface
DSI	Display Serial Interface
FTDI	Future Technology Devices International
I^2C	Inter-Integrated Circuit
I/O	Input/Output
LVDS	Low-Voltage Differential Signaling
MIPI	Mobile Industry Processor Interface
SPI	Serial Peripheral Interface

© 2020-2023 Lattice Semiconductor Corp. All Lattice trademarks, registered trademarks, patents, and disclaimers are as listed at www.latticesemi.com/legal.
All other brand or product names are trademarks or registered trademarks of their respective holders. The specifications and information herein are subject to change without notice.

1. Introduction

This document describes the Lattice Semiconductor CrossLink™ LIF-MD6000 Master Link Board – Revision E (Rev E) that supports a variety of demos, encompassing different signaling logic standards bridging with MIPI® CSI-2/DSI interface. The board's key component is the CrossLink family device that features built in MIPI D-PHY hard blocks to support different bridging solutions.

For the latest information about this board, including optional Tx/Rx Link boards, demo files, further documentation and more, see the Lattice website at: www.latticesemi.com/masterlink.

For details about the CrossLink device, refer to CrossLink Family Data Sheet (FPGA-DS-02007).

The content of this user guide includes descriptions of on-board jumper settings, programming circuit, a complete set of schematics, and bill of materials for LIF-MD6000 Master Link Rev E board.

Refer to Appendix A, B, C, D, E, F for the schematic and BOM of the CrossLink LIF-MD6000 Master Link Rev E board and the schematics and BOMs of the Breakout I/O Link and SMA I/O Link boards that are included in the demo kit.

Circuits on the development kit board:

- Programming Circuit
  - Mini USB Type-B connector to FTDI
  - FTDI to CrossLink using SPI
  - FTDI to CrossLink using I^2C
  - FTDI to XO3LF device using JTAG
- CrossLink
  - MIPI CSI-2/DSI hard block
  - Bridging of multiple signaling standards
  - SPI flash configuration
  - General Purpose Input/Output
  - LED display
- LCMXO3LF-1300E
  - I^2C muxing

Figure 1.1 shows the top view of the LIF-MD6000 Master Link Rev E board and its key components. Figure 1.2 shows the bottom view of the board.

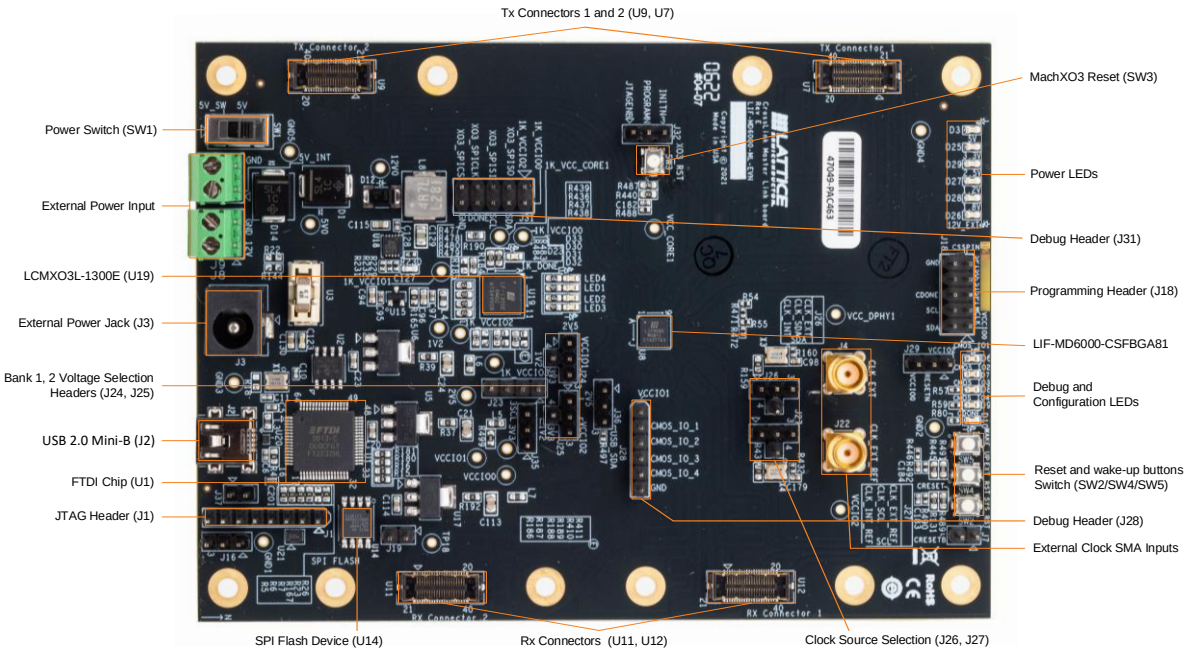

Figure 1.1. Top View of Master Link Rev E Board and its Key Components

© 2020-2023 Lattice Semiconductor Corp. All Lattice trademarks, registered trademarks, patents, and disclaimers are as listed at www.latticesemi.com/legal.
All other brand or product names are trademarks or registered trademarks of their respective holders. The specifications and information herein are subject to change without notice.

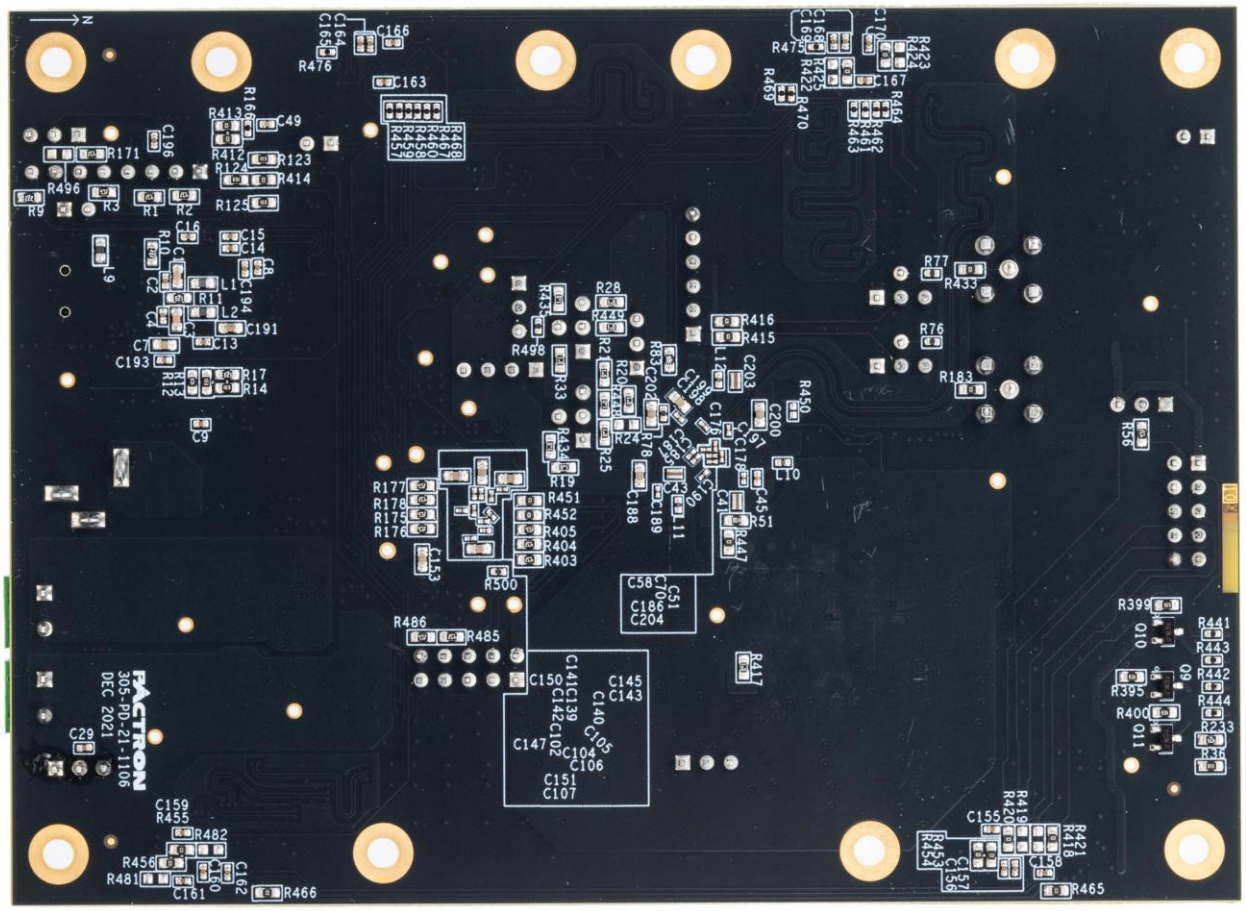

Figure 1.2. Bottom View of Master Link Rev E Board

© 2020-2023 Lattice Semiconductor Corp. All Lattice trademarks, registered trademarks, patents, and disclaimers are as listed at www.latticesemi.com/legal.
All other brand or product names are trademarks or registered trademarks of their respective holders. The specifications and information herein are subject to change without notice.

2. Headers and Test Connections

Figure 1.1 shows the top view of the Master Link Rev E board. The headers and test connections on the board provide access to LIF-MD6000 Master Link Rev E board circuits. Table 2.1 lists the headers and test connectors.

Table 2.1. Headers and Test Connectors

Part	Description	Setting
J1	External JTAG interface - For LCMX03 only	—
J2	mini-B USB connector	—
J3	External 12V power jack	—
J4	External clock input for MIPI D-PHY reference clock	—
J7	SW2 selector	OPEN-NOP, SHORT-CONFIGURATION RESET
J8	External 12 V terminal block	Open
J9	External 5 V terminal block	Open
J16	SPI/I^2C programming selector for LIF-MD6000	1-2 (SPI), 2-3 (I^2C)
J18	External SP/I^2C access for LIF-MD6000	—
J19	SPI Flash chip select	OPEN-OFF, SHORT-ON
J22	External reference clock input for MIPI D-PHY reference clock	—
J23	LCMXO3L debug header	—
J24	VCCIO1 Bank voltage selector	1-2 (2.5 V), 2-3 (3.3 V), 2-4 (1.2 V)
J25	VCCIO2 Bank voltage selector	1-2 (2.5 V), 2-3 (3.3 V), 2-4 (1.2 V)
J26	Internal/External clock and I^2C SDA Mux	1-2 (CLK_INT), 2-3 (CLK_EXT), 2-4 (SDA)
J27	Internal/External reference clock and I^2C SCL Mux	1-2 (CLK_INT_REF), 2-3 (CLK_EXT_REF), 2-4 (SCL)
J28	Reveal analyzer signal connector	—
J29	Reset signal voltage selector	1-2 (VCCIO2), 2-3 (VCCIO0)
J31	External SPI/I^2C access for LCMXO3L	—
J32	LCMXO3L configuration header	—
J35	SPI/I^2C programming selector for LIF-MD6000	1-2 (SPI), 2-3 (I^2C)
J36	SPI/I^2C programming selector for LIF-MD6000	1-2 (SPI), 2-3 (I^2C)
J37	FT2232H reset	OPEN-NORMAL OP, SHORT-RESET
SW1	External adaptor power ON/OFF	—
SW2	Configuration reset for LIF-MD6000	—
SW3	External reset for LCMXO3L	—
SW4[1]	External reset for LIF-MD6000	—
SW5	PMU WAKEUP Switch for LIF-MD6000	—
U7	Tx Connectors for external interface	—
U9	Tx Connectors for external interface	—
U11	Rx Connectors for external interface	—
U12	Rx Connectors for external interface	—

Note:

1. Some CrossLink demos utilize this reset signal to ball G9 of Bank 2 while it is configured as a 1.2 V Bank. However, LVCMOS12 inputs are no longer supported across all 3 Banks. Lattice Diamond® software 3.9 and later does not allow this signal to be placed on a 1.2 V Bank. If it is necessary to recompile one of these demo projects, the necessary modifications should be made to the project and the board to move this reset signal to a non-1.2 V Bank on CrossLink.

© 2020-2023 Lattice Semiconductor Corp. All Lattice trademarks, registered trademarks, patents, and disclaimers are as listed at www.latticesemi.com/legal.
All other brand or product names are trademarks or registered trademarks of their respective holders. The specifications and information herein are subject to change without notice.

3. Programming Circuit

The Mini-B USB connector is used for programming the board by using Lattice Diamond Programmer software. Figure 3.1 shows the programming block of LIF-MD6000 Master Link Rev E board.

The Mini-B USB connector interfaces to the FTDI FT2232H IC. The FTDI IC works with Diamond Programmer software to provide interfaces for:

- JTAG – to program MachXO3 LCMXO3LF-1300E
- SPI – to program CrossLink and/or SPI Flash Memory
- I^2C – to program CrossLink

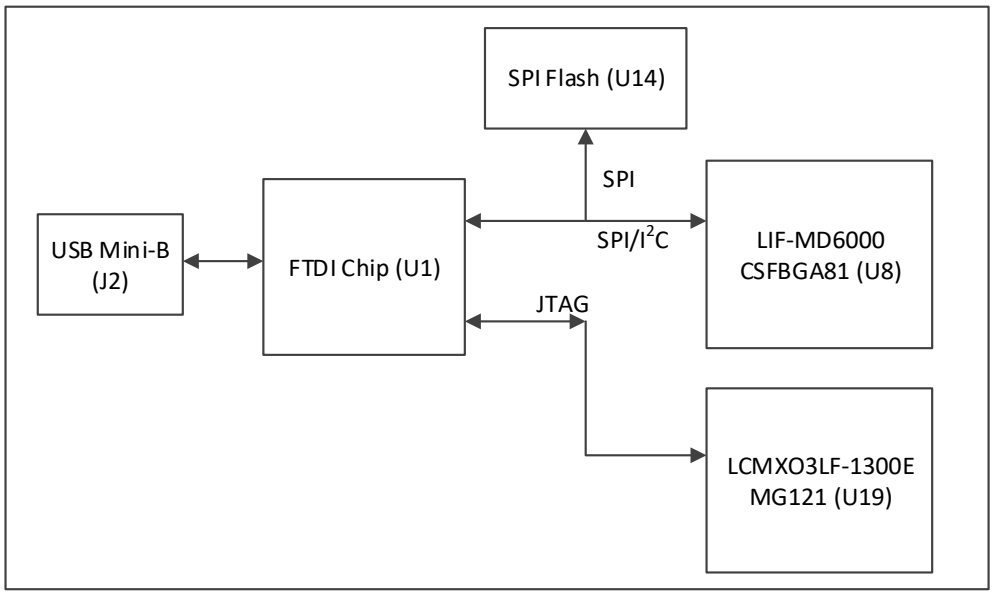

Figure 3.1. Programming Block

3.1. Bridging Circuit

Figure 3.2 shows the block diagram of bridging of different standard interfaces. The CrossLink device is used as a bridging device that supports a variety of I/O standards. This demo board supports development of the following interface bridges:

- 1:1 MIPI DSI Display Interface Bridge
- 1:2 MIPI DSI Display Interface Bridge
- 2:1 MIPI CSI-2 Image Sensor Aggregator Bridge
- CMOS to MIPI CSI-2 Image Sensor Interface Bridge
- MIPI CSI-2 to CMOS Image Sensor Interface Bridge
- MIPI DSI to CMOS Display Interface Bridge
- OpenLDI LVDS to MIPI DSI Display Interface Bridge
- CMOS to MIPI DSI Display Interface Bridge

© 2020-2023 Lattice Semiconductor Corp. All Lattice trademarks, registered trademarks, patents, and disclaimers are as listed at www.latticesemi.com/legal.
All other brand or product names are trademarks or registered trademarks of their respective holders. The specifications and information herein are subject to change without notice.

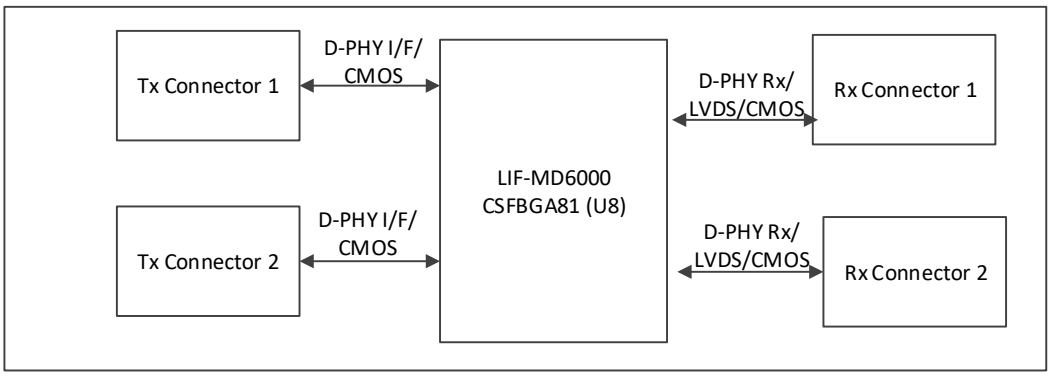

Figure 3.2. Bridging Block

3.2. I²C Expander

Figure 3.3 shows the block diagram of the I²C expander. The LCMXO3LF-1200E device is used as an I²C expander and it supports a single master and multiple slave devices connected to the board. The master I²C interface is connected to the Tx header and the slave device I²C interface is connected to the Rx connectors supporting any slave device access from the master based on the slave address.

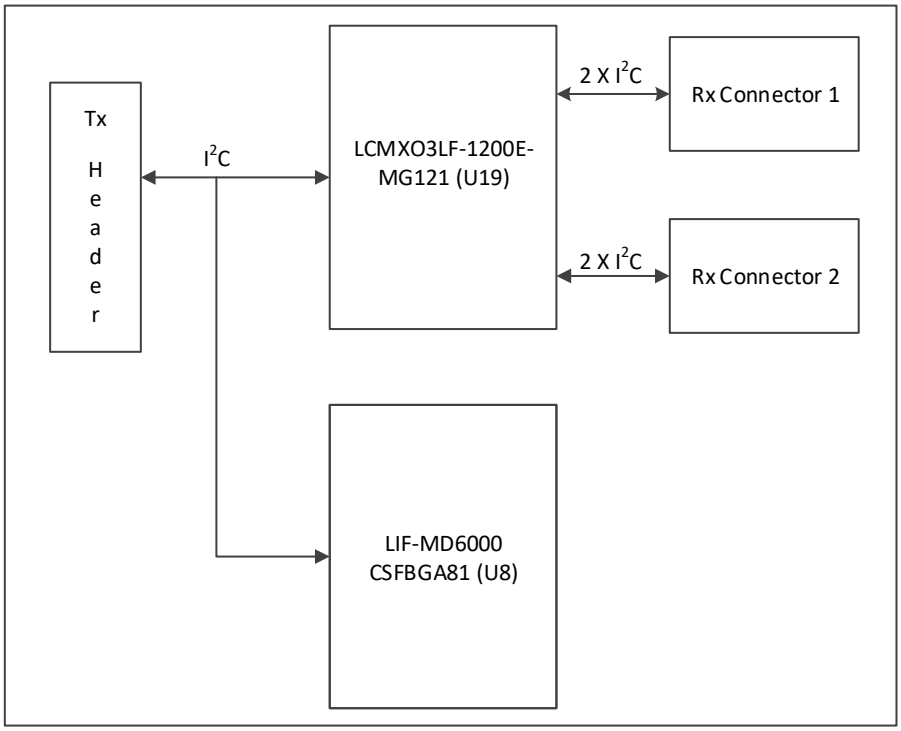

Figure 3.3. I²C Expander Block

© 2020-2023 Lattice Semiconductor Corp. All Lattice trademarks, registered trademarks, patents, and disclaimers are as listed at www.latticesemi.com/legal.
All other brand or product names are trademarks or registered trademarks of their respective holders. The specifications and information herein are subject to change without notice.

4. Power Supply

The power supply to the development kit is provided by the Mini-B USB connector or from an external adaptor.

Figure 4.1 shows the power supply block of the CrossLink LIF-MD6000 Master Link Rev E board. The external adaptor provides 12 V power source through voltage regulators on the board to CrossLink and LCMXO3LF-1300E, as well as to the external boards connected to Tx and Rx Headers. The Mini-B USB connector provides 5 V to the various voltage regulators and is also used for device programming. Each I/O and core voltage rail on the board is accessible by a test point on the board. The current flowing to each rail can be measured using a 1 Ω resistor placed in the path of each voltage rail.

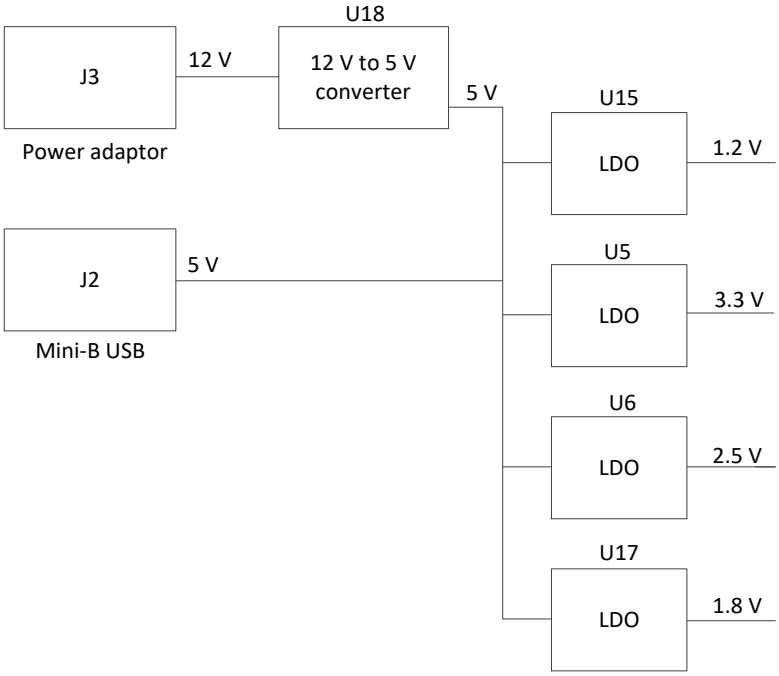

Figure 4.1. Power Supply Block

Table 4.1 lists the device power rails. There are five voltage regulators on the board used to supply the 5 V, 3.3 V, 2.5 V, 1.8 V, and 1.2 V rails. The input to these regulators is from either the Mini-B USB connector (J2), an external 12 V adaptor (J3), or an external power supply to the terminal blocks of J8 or J9. Switch SW1 is used to connect/disconnect power to/from the board.

Table 4.1. Power LEDs

Voltage Rail	LED	Color
12	D26	Green
5	D3	Green
3.3	D25	Green
2.5	D29	Green
1.8	D28	Green
1.2	D27	Green

Table 4.2 lists the board voltage rails, including the rail source voltage, test point number, and current sense resistor number.

© 2020-2023 Lattice Semiconductor Corp. All Lattice trademarks, registered trademarks, patents, and disclaimers are as listed at www.latticesemi.com/legal.
All other brand or product names are trademarks or registered trademarks of their respective holders. The specifications and information herein are subject to change without notice.

Table 4.2. Device Power Rail Summary and Test Points

Voltage Rail	Source Rail	Current Sense Resistor	Test Points
12 V	—	—	12V0
5 V	12 V	—	5V0
+3.3 V	5 V	—	3V3
+2.5 V	5 V	—	2V5
+1.8 V	5 V	—	—
+1.2 V	5 V	—	1V2
VCC_CORE	+1.2 V	R19	VCC_CORE1
VCCIO0	+2.5 V/+3.3 V	R20/R24	VCCIO0
VCCIO1	+1.2 V/+2.5 V/+3.3 V	R21/R25/R434/R448	VCCIO1
VCCIO2	+1.2 V/+2.5 V/+3.3 V	R28/R33/R435/R449	VCCIO2
VCC_DPHY	+1.2 V	R417	VCC_DPHY
1K_VCC_CORE	+1.2 V	R190	1K_VCC_CORE1
1K_VCCIO0	+2.5 V/+3.3 V	R410/R411	1K_VCCIO0
1K_VCCIO1	+2.5 V/+3.3 V	R184/R185	1K_VCCIO1
1K_VCCIO2	+2.5 V/+3.3 V	R186/R187	1K_VCCIO2
1K_VCCIO3	+2.5 V/+3.3 V	R188/R189	1K_VCCIO3

© 2020-2023 Lattice Semiconductor Corp. All Lattice trademarks, registered trademarks, patents, and disclaimers are as listed at www.latticesemi.com/legal.
All other brand or product names are trademarks or registered trademarks of their respective holders. The specifications and information herein are subject to change without notice.

5. Status Indicators

The LED status indicators on the board show power, configuration, and application status. Table 5.1 lists the status LED I/O map.

Table 5.1. Status LED I/O Map

Device	LED	Net Name	Color
CrossLink	D6	CMOS_IO_1	Blue
CrossLink	D7	CMOS_IO_2	Blue
CrossLink	D8	CMOS_IO_3	Blue
CrossLink	D9	CMOS_IO_4	Blue
CrossLink	D10	CDONE	Green
LCMX03LF-1300E	D23	DONE	Red
LCMX03LF-1300E	D30	LED1	Blue
LCMX03LF-1300E	D31	LED2	Blue
LCMX03LF-1300E	D32	LED3	Blue
LCMX03LF-1300E	D33	LED4	Blue

© 2020-2023 Lattice Semiconductor Corp. All Lattice trademarks, registered trademarks, patents, and disclaimers are as listed at www.latticesemi.com/legal.
All other brand or product names are trademarks or registered trademarks of their respective holders. The specifications and information herein are subject to change without notice.

6. SMA I/O Link Board

The SMA I/O Link board connects to the CrossLink LIF-MD6000 Master Link Rev E board's Tx or Rx connectors (U7, U9, U11 or U12) and transfers signals to the respective SMA connectors. Note that pins 19 and 20 on the U1 connector are tied together. This will short the signals on U11 or U12 of the CrossLink LIF-MD6000 Master Link Board if the SMA I/O Link Board is connected to either one of these connectors.

Table 6.1. Headers and Test Connectors

Part	Description	Mapping to U1
J1	SMA connector for DCK_TX_P	Pin 1
J2	SMA connector for DCK_TX_N	Pin 2
J3	SMA connector for DATA0_TX_P	Pin 4
J4	SMA connector for DATA0_TX_N	Pin 5
J5	SMA connector for DATA1_TX_P	Pin 7
J6	SMA connector for DATA1_TX_N	Pin 8
J7	SMA connector for DATA2_TX_P	Pin 13
J8	SMA connector for DATA2_TX_N	Pin 14
J9	SMA connector for DATA3_TX_P	Pin 16
J10	SMA connector for DATA3_TX_N	Pin 17
J11	SMA connector for DATA4_TX_P	Pin 24
J12	SMA connector for DATA4_TX_N	Pin 25
J13	SMA connector for DATA5_TX_P	Pin 27
J14	SMA connector for DATA5_TX_N	Pin 28
U1	Connector to interface to CrossLink Master Link Rev E board	N/A

Table 6.2. U1 Connector Description

Pin	Name
1	CH4_DCK_P
2	CH4_DCK_N
3	GND
4	CH4_DATA0_P
5	CH4_DATA0_N
6	GND
7	CH4_DATA1_P
8	CH4_DATA1_N
9	GND
10	SN
11	SCLK
12	GND
13	CH4_DATA2_P
14	CH4_DATA2_N
15	GND
16	CH4_DATA3_P
17	CH4_DATA3_N
18	GND
19	12V
20	12V

Pin	Name
21	TBD
22	RESETN
23	PWR_5-0V
24	GND
25	GND
26	PWR_3-3V
27	GND
28	GND
29	PWR_1-8V
30	MOSI
31	MISO
32	PWR_1-8V
33	GND
34	GND
35	PWR_3-3V
36	GND
37	GND
38	PWR_5-0V
39	SDA
40	SCL

Note: U1 connector pin names may be different from the actual signal depending on which the CrossLink LIF-MD6000 Master Link Rev E board connector this daughter board is connected.

© 2020-2023 Lattice Semiconductor Corp. All Lattice trademarks, registered trademarks, patents, and disclaimers are as listed at www.latticesemi.com/legal.
All other brand or product names are trademarks or registered trademarks of their respective holders. The specifications and information herein are subject to change without notice.

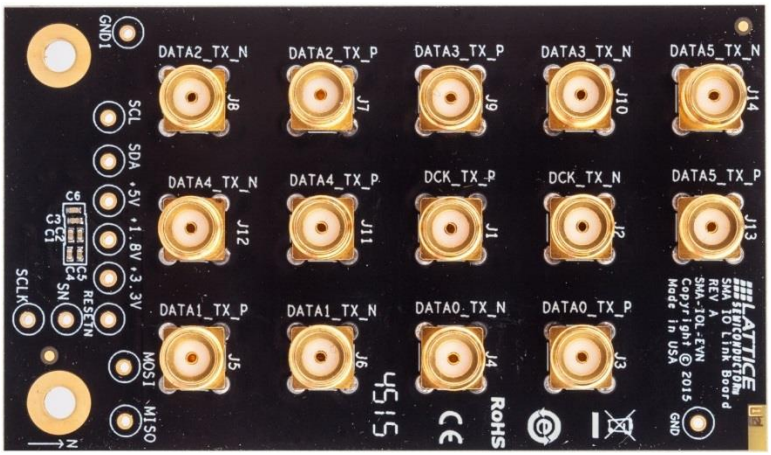

Figure 6.1. Top View of SMA I/O Link Board

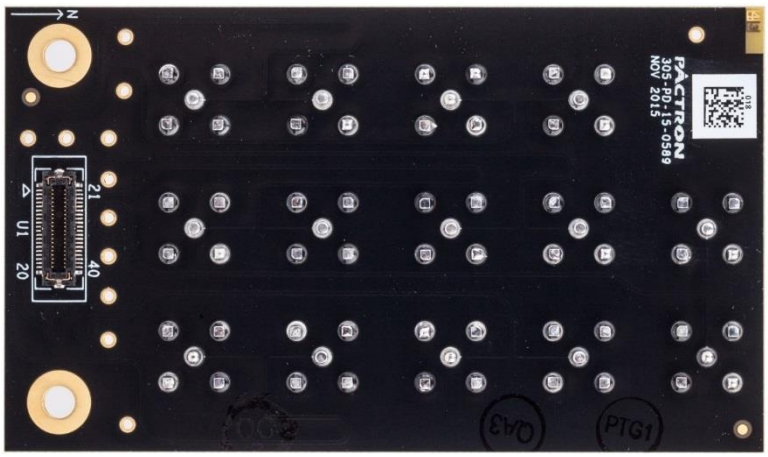

Figure 6.2. Bottom View of SMA I/O Link Board

© 2020-2023 Lattice Semiconductor Corp. All Lattice trademarks, registered trademarks, patents, and disclaimers are as listed at www.latticesemi.com/legal.
All other brand or product names are trademarks or registered trademarks of their respective holders. The specifications and information herein are subject to change without notice.

7. Breakout I/O Link Board

The Breakout I/O Link board connects to the CrossLink LIF-MD6000 Master Link Rev E board's Tx or Rx connectors (U7, U9, U11 or U12) and transfers signals to the 26-pin header (J2).

Table 7.1. Headers and Test Connectors

Part	Description	Setting
J2	13x2 Header	—
U1	Connector to interface to CrossLink Master Link Rev E board	—

Table 7.2. U1 Connector Description

Pin	Name
1	CH4_DCK_P
2	CH4_DCK_N
3	GND
4	CH4_DATA0_P
5	CH4_DATA0_N
6	GND
7	CH4_DATA1_P
8	CH4_DATA1_N
9	GND
10	SN
11	SCLK
12	GND
13	CH4_DATA2_P
14	CH4_DATA2_N
15	GND
16	CH4_DATA3_P
17	CH4_DATA3_N
18	GND
19	12V
20	12V

Pin	Name
21	TBD
22	RESETN
23	PWR_5-0V
24	GND
25	GND
26	PWR_3-3V
27	GND
28	GND
29	PWR_1-8V
30	MOSI
31	MISO
32	PWR_1-8V
33	GND
34	GND
35	PWR_3-3V
36	GND
37	GND
38	PWR_5-0V
39	SDA
40	SCL

Note: U1 connector pin names may be different than the actual signal depending on which CrossLink LIF-MD6000 Master Link Rev E board connector this daughter board is connected.

© 2020-2023 Lattice Semiconductor Corp. All Lattice trademarks, registered trademarks, patents, and disclaimers are as listed at www.latticesemi.com/legal.
All other brand or product names are trademarks or registered trademarks of their respective holders. The specifications and information herein are subject to change without notice.

Table 7.3. J2 Header Description

Pin	Name	Mapping to U1
1	+3.3V	N/A
2	+1.8V	N/A
3	RESETN	Pin 22
4	CH4_DCK_TX_P	Pin 1
5	SDA	Pin 39
6	CH4_DCK_TX_N	Pin 2
7	SCL	Pin 40
8	GND	N/A
9	GND	N/A
10	CH4_DATA0_TX_P	Pin 4
11	CH4_DATA3_TX_P	Pin 16
12	CH4_DATA0_TX_N	Pin 5
13	CH4_DATA3_TX_N	Pin 17
14	GND	N/A
15	GND	N/A
16	CH4_DATA1_TX_P	Pin 7
17	CH4_DATA4_TX_P	Pin 24
18	CH4_DATA1_TX_N	Pin 8
19	CH4_DATA4_TX_N	Pin 25
20	GND	N/A
21	GND	N/A
22	CH4_DATA2_TX_P	Pin 13
23	CH4_DATA5_TX_P	Pin 27
24	CH4_DATA2_TX_N	Pin 14
25	CH4_DATA5_TX_N	Pin 28
26	GND	N/A

© 2020-2023 Lattice Semiconductor Corp. All Lattice trademarks, registered trademarks, patents, and disclaimers are as listed at www.latticesemi.com/legal.
All other brand or product names are trademarks or registered trademarks of their respective holders. The specifications and information herein are subject to change without notice.

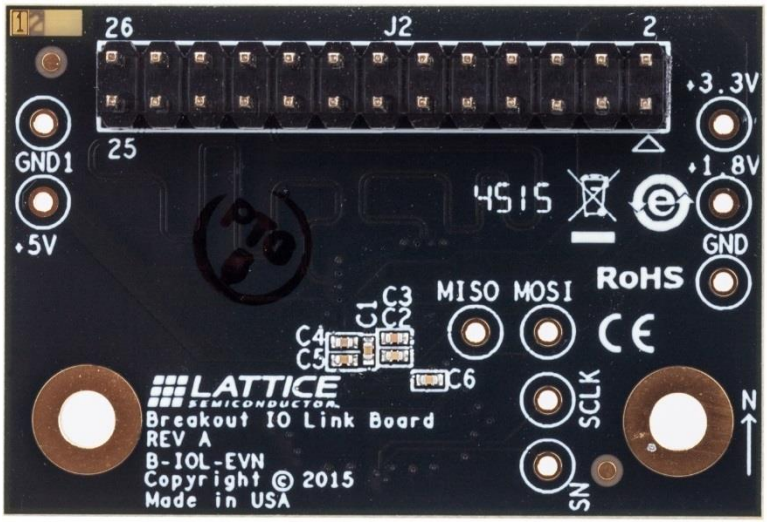

Figure 7.1. Top View of Breakout I/O Link Board

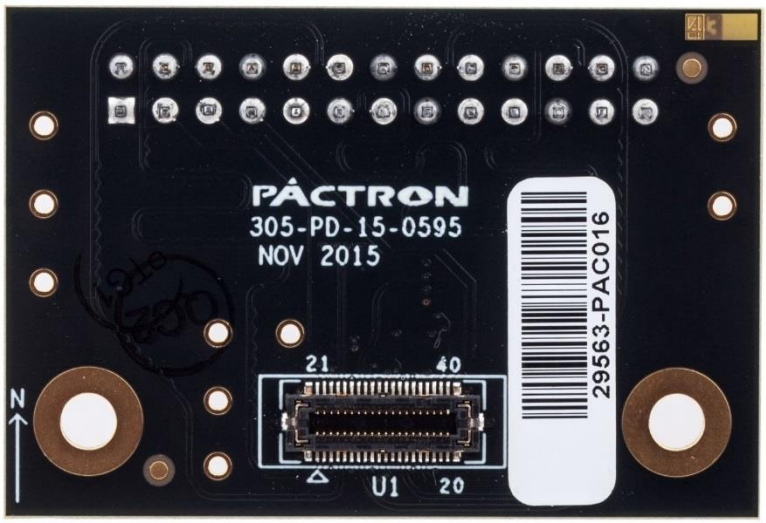

Figure 7.2. Bottom View of Breakout I/O Link Board

© 2020-2023 Lattice Semiconductor Corp. All Lattice trademarks, registered trademarks, patents, and disclaimers are as listed at www.latticesemi.com/legal.
All other brand or product names are trademarks or registered trademarks of their respective holders. The specifications and information herein are subject to change without notice.

8. Ordering Information

Table 8.1. Ordering Information

Description	Ordering Part Number	China RoHS Environment-Friendly Use Period (EFUP)
CrossLink: LIF-MD6000 Master Link Rev E Board (Includes 1 SMA I/O Link Board and 1 Breakout I/O Link Board)	LIF-MD6000-ML-EVN	
CrossLink: LIF-MD6000 I/O Link Boards (Includes 1 SMA I/O Link Board and 1 Breakout I/O Link Board)	LIFMD-IOL-EVN	

© 2020-2023 Lattice Semiconductor Corp. All Lattice trademarks, registered trademarks, patents, and disclaimers are as listed at www.latticesemi.com/legal.
All other brand or product names are trademarks or registered trademarks of their respective holders. The specifications and information herein are subject to change without notice.

References

For more information, refer to CrossLink Family Data Sheet (FPGA-DS-02007).

© 2020-2023 Lattice Semiconductor Corp. All Lattice trademarks, registered trademarks, patents, and disclaimers are as listed at www.latticesemi.com/legal.
All other brand or product names are trademarks or registered trademarks of their respective holders. The specifications and information herein are subject to change without notice.

Technical Support Assistance

Submit a technical support case through www.latticesemi.com/techsupport.

For frequently asked questions, refer to the Lattice Answer Database at www.latticesemi.com/Support/AnswerDatabase.

© 2020-2023 Lattice Semiconductor Corp. All Lattice trademarks, registered trademarks, patents, and disclaimers are as listed at www.latticesemi.com/legal.
All other brand or product names are trademarks or registered trademarks of their respective holders. The specifications and information herein are subject to change without notice.

Appendix A. LIF-MD6000-ML-EVN-BRD Schematics

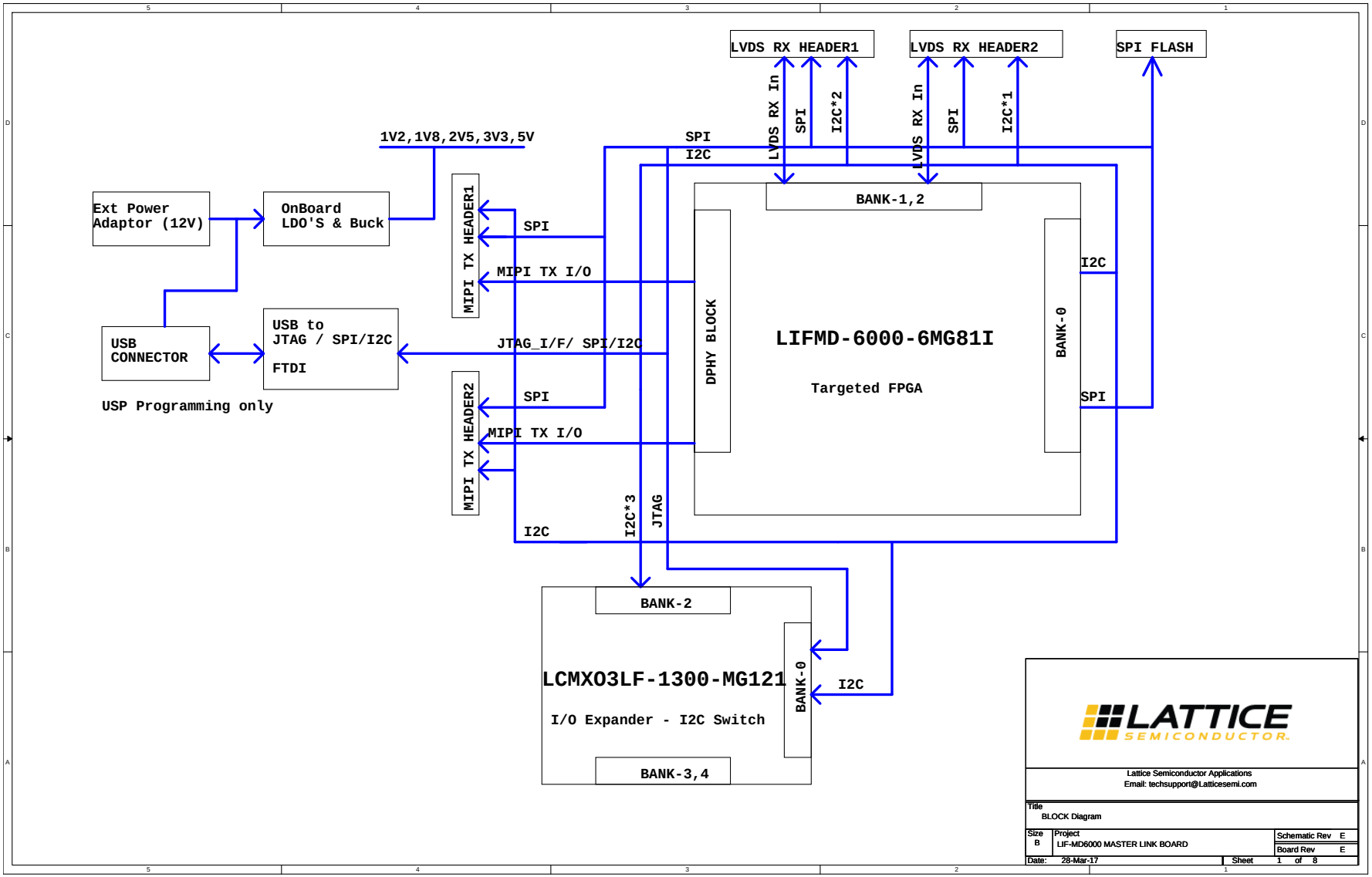

Figure A.1. LIF-MD6000 Master Link Rev E Board Block Diagram

© 2020-2023 Lattice Semiconductor Corp. All Lattice trademarks, registered trademarks, patents, and disclaimers are as listed at www.latticesemi.com/legal.
All other brand or product names are trademarks or registered trademarks of their respective holders. The specifications and information herein are subject to change without notice.

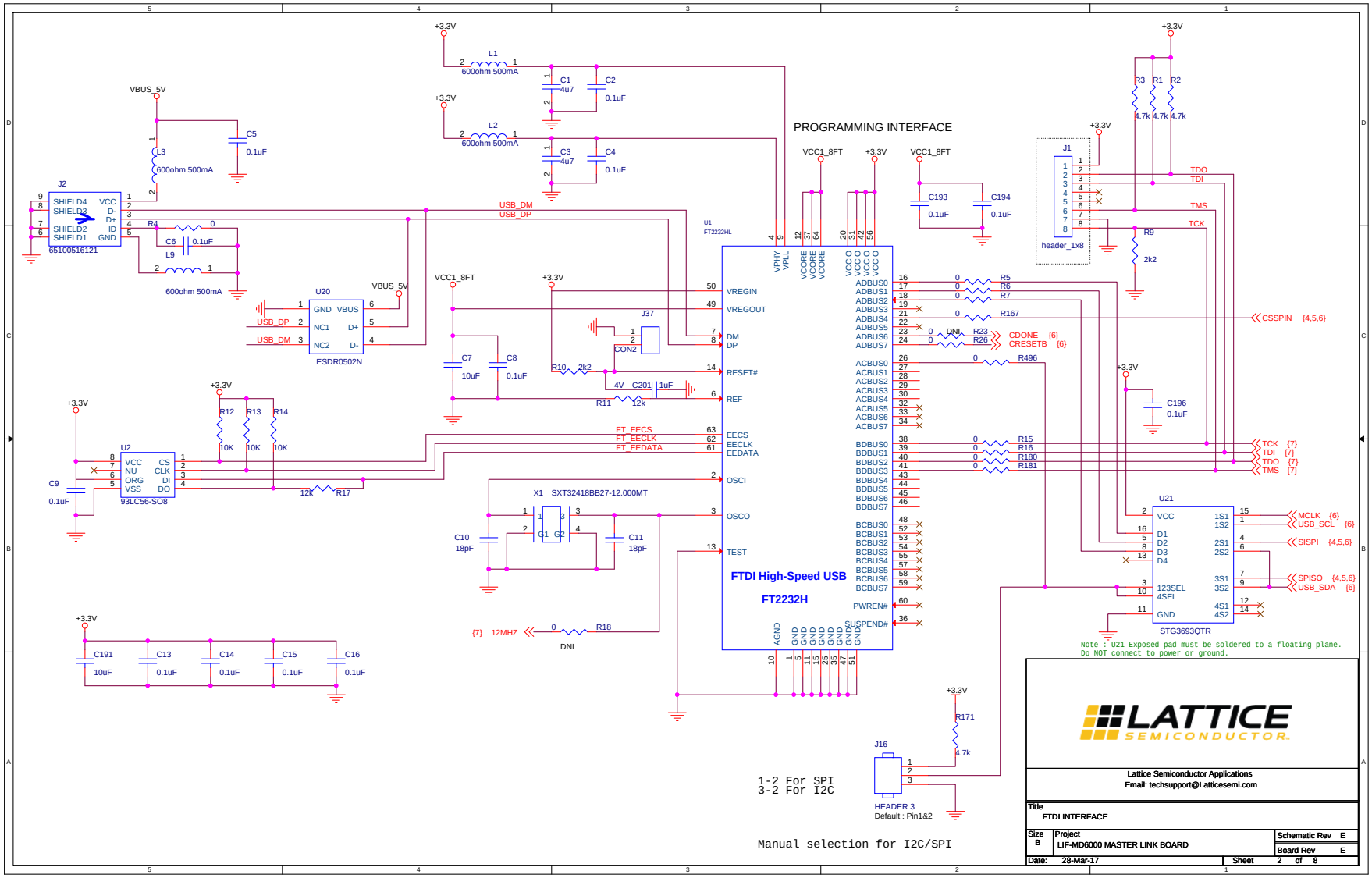

Figure A.2. FTDI Interface

© 2020-2023 Lattice Semiconductor Corp. All Lattice trademarks, registered trademarks, patents, and disclaimers are as listed at www.latticesemi.com/legal.
All other brand or product names are trademarks or registered trademarks of their respective holders. The specifications and information herein are subject to change without notice.

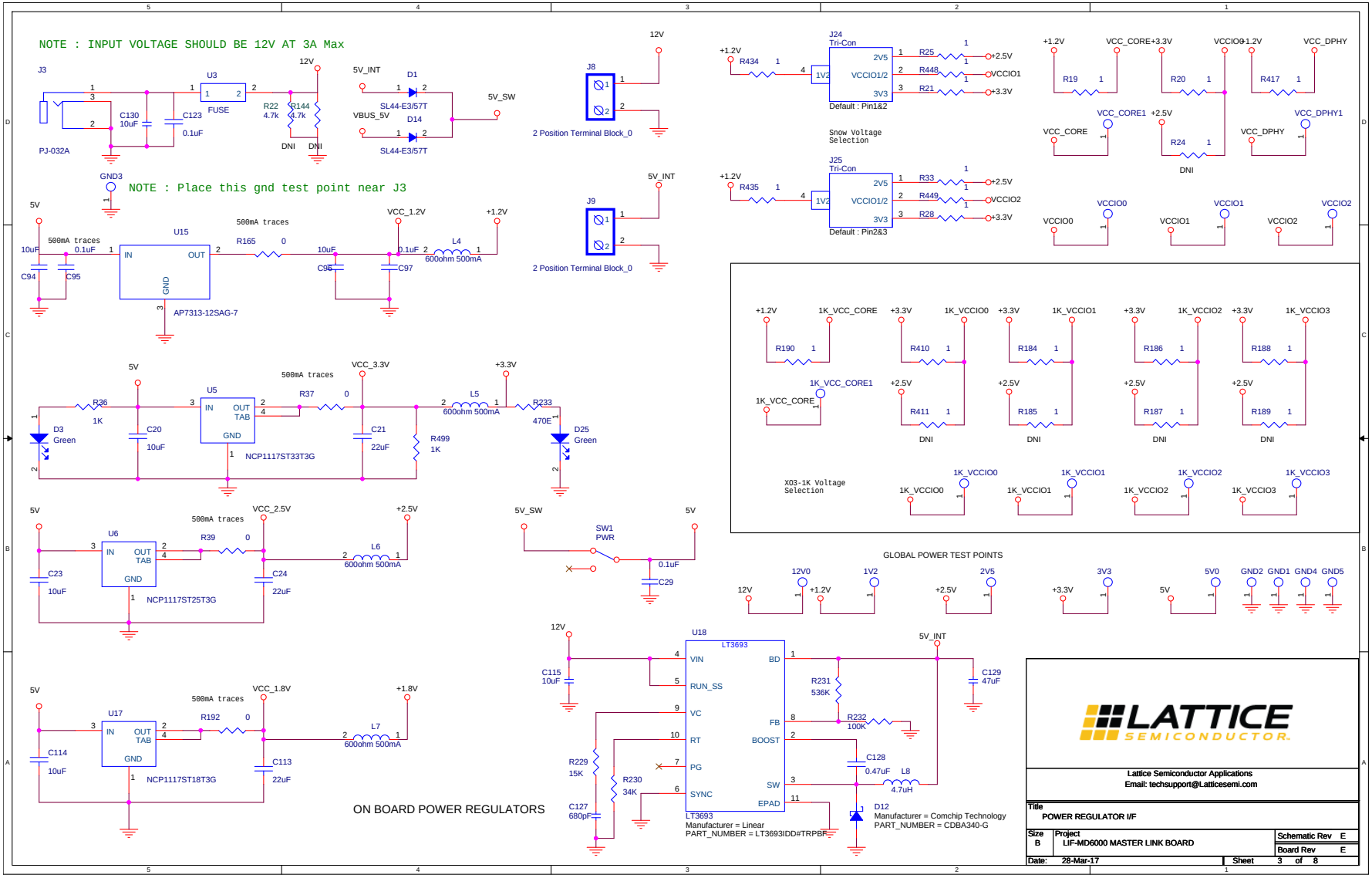

Figure A.3. Power Regulator Interface

© 2020-2023 Lattice Semiconductor Corp. All Lattice trademarks, registered trademarks, patents, and disclaimers are as listed at www.latticesemi.com/legal.
All other brand or product names are trademarks or registered trademarks of their respective holders. The specifications and information herein are subject to change without notice.

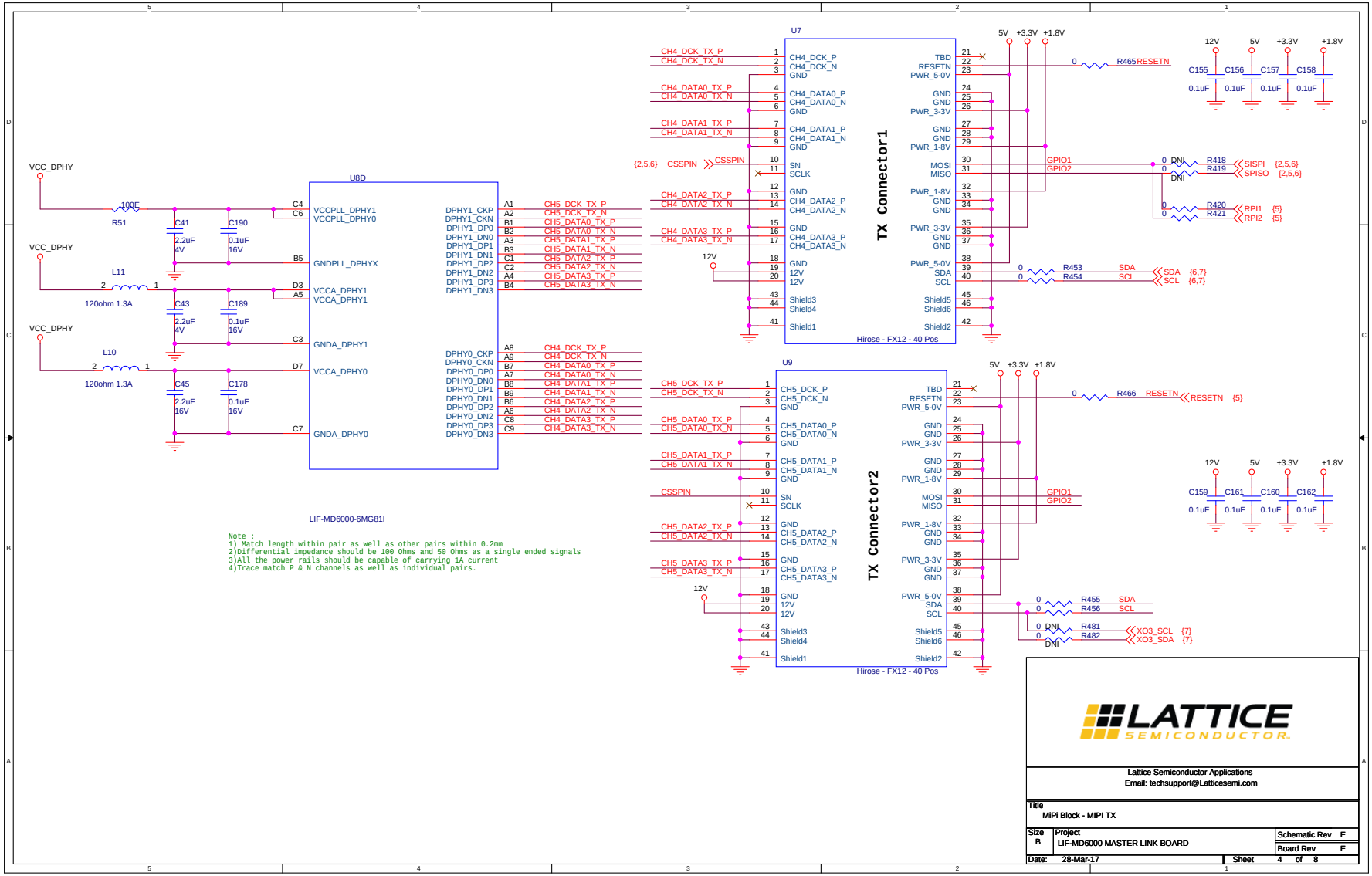

Figure A.4. MIPI Block – MIPI Tx

© 2020-2023 Lattice Semiconductor Corp. All Lattice trademarks, registered trademarks, patents, and disclaimers are as listed at www.latticesemi.com/legal.
All other brand or product names are trademarks or registered trademarks of their respective holders. The specifications and information herein are subject to change without notice.

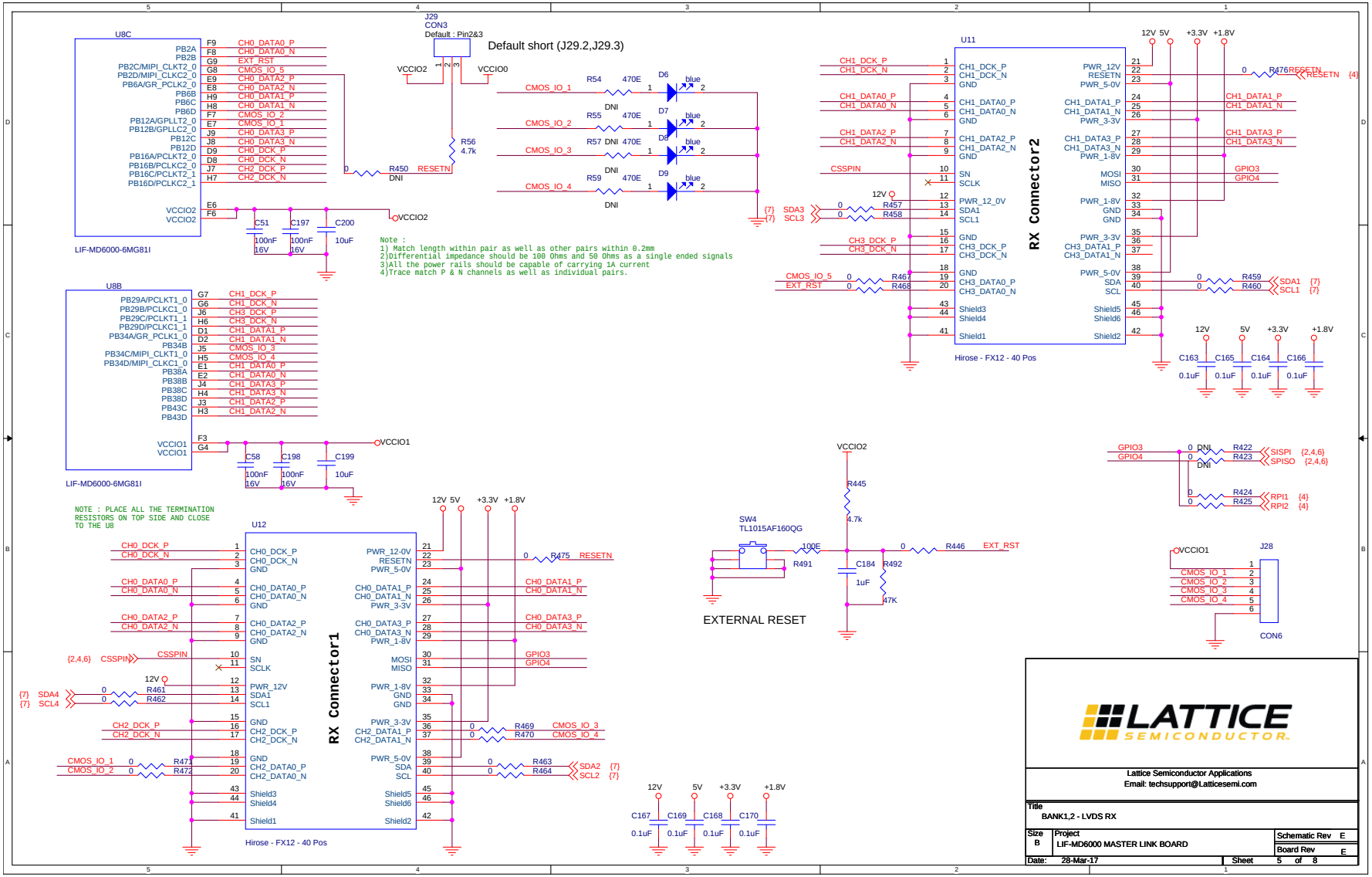

Figure A.5. Bank 1, 2 – LVDS Rx

© 2020-2023 Lattice Semiconductor Corp. All Lattice trademarks, registered trademarks, patents, and disclaimers are as listed at www.latticesemi.com/legal.
All other brand or product names are trademarks or registered trademarks of their respective holders. The specifications and information herein are subject to change without notice.

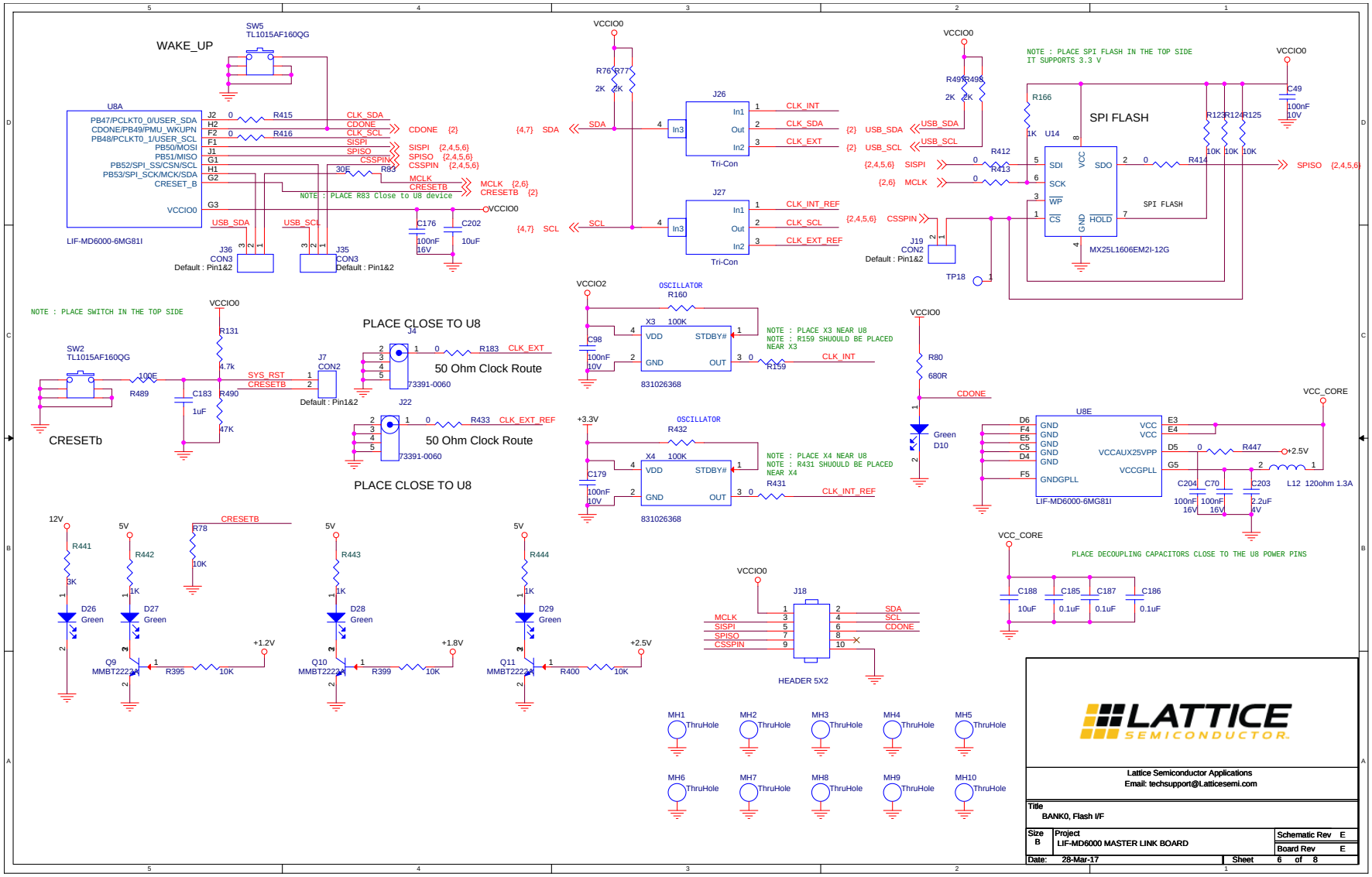

Figure A.6. Bank0, Flash Interface

© 2020-2023 Lattice Semiconductor Corp. All Lattice trademarks, registered trademarks, patents, and disclaimers are as listed at www.latticesemi.com/legal.
All other brand or product names are trademarks or registered trademarks of their respective holders. The specifications and information herein are subject to change without notice.

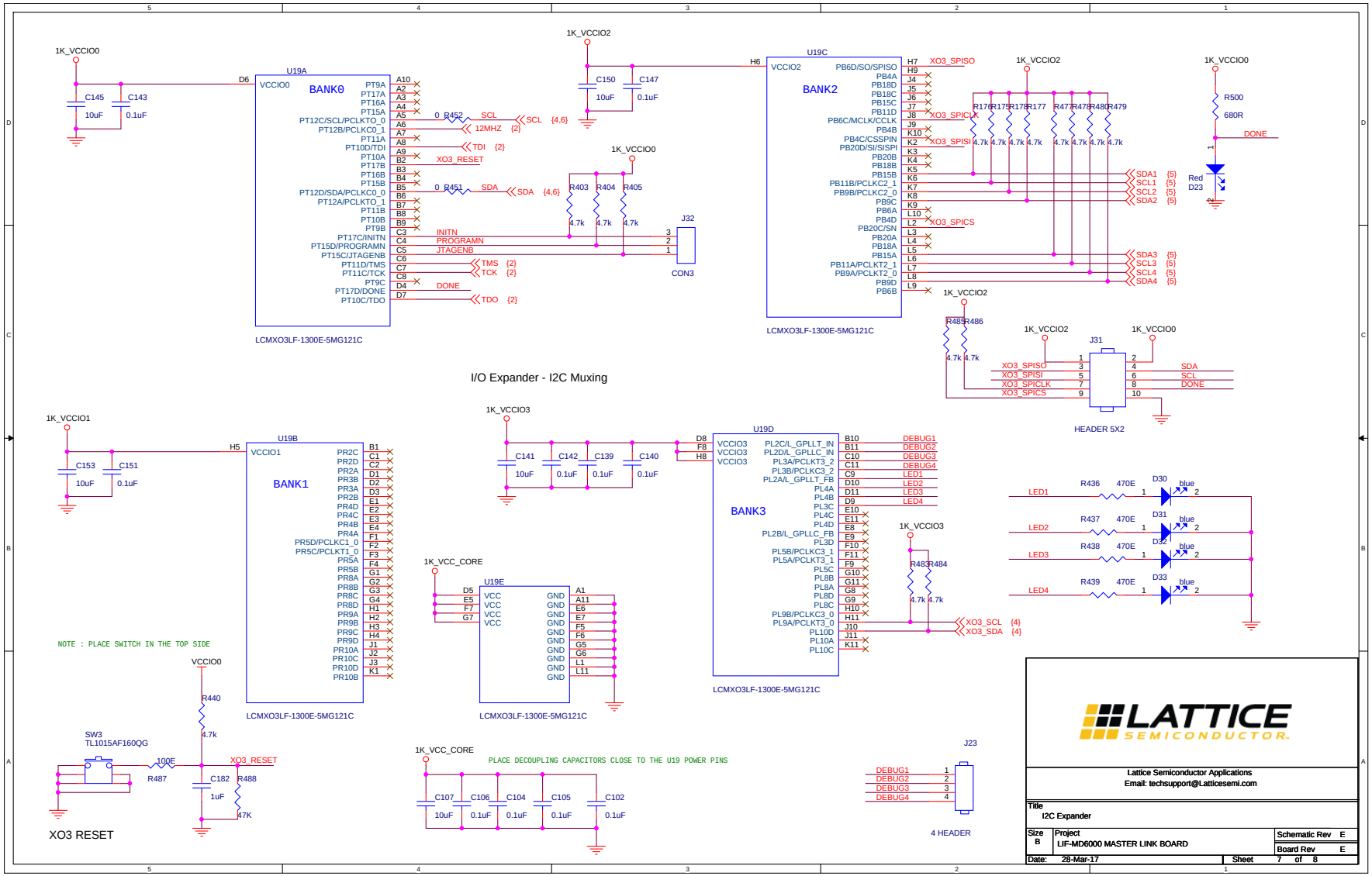

Figure A.7. I²C Expander

© 2020-2023 Lattice Semiconductor Corp. All Lattice trademarks, registered trademarks, patents, and disclaimers are as listed at www.latticesemi.com/legal.
All other brand or product names are trademarks or registered trademarks of their respective holders. The specifications and information herein are subject to change without notice.

```
Routing guidlines for MIPI & LVDS
---------------------------------

1)All differential routes are required to have the same length between the positive (true) and the negative (complimentary) routes.
 Spacing between the positive (true) and the negative (complimentary) shall be 2 times trace width.

2)Target differential impedance shall be 100 Ohms

3)Trace length matching to be within 1.0 mm (40 mil) across the entire bus.

4)Use small humps for skew corrections

5)Place signal vias close together and remove copper in between vias.
Traces to be fully shielded with GND stitching terminating at both trace end points

6)Board trace impedance results must be within ±10 percent of target and
Power plane impedance to be within +/- 10 percent of target at operating frequency


 MIPI &LVDS Simulation Requirement
 ---------------------------------


 1)MIPI Differential Mode insertion Loss shall be > -1.6dB at 750 MHz

 2)MIPI Differential Mode Return Loss shall be < -15dB at 750 MHz

 3)MIPI Common Mode Return Loss shall be < -15dB at 750 MHz

 4)LVDS differential mode return loss shall be < -16.5db at 600 MHz

 5)LVDS common mode return loss shall be < -16.5db at 600 MHz

 6)LVDS insertion loss shall be > -1.7db at 600 MHz

 7)LVDS Cross coupling shall be < -22 dB for victim IO at 600MHz

 8)Power plane impedance to be within +/- 10 percent of target at operating frequency
```

Lattice Semiconductor Applications
Email: techsupport@Latticesemi.com

Title: Layout Guidelines		
Size: B	Project: LIF-MD6000 MASTER LINK BOARD	Schematic Rev E
		Board Rev E
Date: 28-Mar-17	Sheet 8 of 8	

Figure A.8. Layout Guidelines

© 2020-2023 Lattice Semiconductor Corp. All Lattice trademarks, registered trademarks, patents, and disclaimers are as listed at www.latticesemi.com/legal.
All other brand or product names are trademarks or registered trademarks of their respective holders. The specifications and information herein are subject to change without notice.

Appendix B. LIF-MD6000-ML-EVN-BRD Bill of Materials

Item	Reference	Qty	Part	PCB Footprint	Comments	PART_NUMBER	Manufacturer	Description
1	C1,C3	2	4u7	C0603	—	ECJ-1VB0J475K	Panasonic	Cap Cer 4.7uF 6.3V 10% X5R 0603
2	C2,C4,C5,C6,C8,C9,C13, C14,C15,C16,C29,C95, C97,C155,C156,C157, C158,C159,C160,C161, C162,C163,C164,C165, C166,C167,C168,C169, C170,C193,C194,C196	32	0.1uF	C0402	—	GRM155R61H104KE14D	Murata	CAP CER 0.1UF 50V X5R 0402
3	C7,C20,C23,C94,C96, C107,C114,C141,C145, C150,C153,C188,C191, C199,C200,C202	16	10uF	C0603	—	GRM188R61A106KE69D	Murata	CAP CER 10UF 10V X5R 0603
4	C10,C11	2	18pF	C0402	—	C0402C180K3GACTU	Kemet	CAP CER 18PF 25V NP0 0402
5	C21,C24,C113	3	22uF	C0805	—	LMK212BJ226MG-T	Taiyo Yuden	CAP CER 22UF 10V X5R 0805
6	C41,C43,C203	3	2.2uF	C0306	—	LLL185C70G225ME01L	Murata	CAP CER 2.2UF 4V X7S 0306
7	C45	1	2.2uF	C0402	—	GRM155R61C225KE44D	Murata	CAP CER 2.2UF 16V X5R 0402
8	C49,C98,C179	3	100nF	C0402	—	GRM155R61A104KA01D	Murata	CAP CER 0.1UF 10V X5R 0402
9	C51,C58,C70,C176,C197,C1 98,C204	7	100nF	C0201	—	C0603X5R1C104K030BC	TDK	CAP CER 0.1UF 16V X5R 0201
10	C102,C104,C105,C106, C139,C140,C142,C143, C147,C151,C185,C186, C187,C178,C189,C190	16	0.1uF	C0201	—	GRM033R61C104ME84D	Murata	CAP CER 0.1UF 16V X5R 0201
11	C115,C130	2	10uF	C0603	—	CL10A106MA8NRNC	Samsung	CAP CER 10UF 25V 20% X5R 0603
12	C123	1	0.1uF	C0603	—	GRM188R71E104KA01D	Murata	CAP CER 0.1UF 25V 10% X7R 0603
13	C127	1	680pF	C0603	—	C0603C681J3GACTU	Kemet	CAP CER 680PF 25V 5% NP0 0603
14	C128	1	0.47uF	C0402	—	CL05A474KA5NNNC	Samsung	CAP CER 0.47UF 25V 10% X5R 0402

© 2020-2023 Lattice Semiconductor Corp. All Lattice trademarks, registered trademarks, patents, and disclaimers are as listed at www.latticesemi.com/legal.
All other brand or product names are trademarks or registered trademarks of their respective holders. The specifications and information herein are subject to change without notice.

Item	Reference	Qty	Part	PCB Footprint	Comments	PART_NUMBER	Manufacturer	Description
15	C129	1	47uF	C0805	—	C2012X5R1A476M125AC	TDK	CAP CER 47UF 10V 20% X5R 0805
16	C182,C183,C184	3	1uF	C0402	—	C0402C105K9PACTU	Kemet	CAP CER 1UF 6.3V X5R 0402
17	C201	1	1uF	C0306	—	LLR185C70G105ME05L	Murata	CAP CER 1UF 4V X7S 0306
18	D1,D14	2	SL44-E3/57T	SL44E357T	—	SL44-E3/57T	Vishay semiconductor	DIODE SCHOTTKY 40V 4A DO214AB
19	D3,D10,D25,D26,D27, D28,D29	7	Green	led_0603	—	LTST-C190KGKT	LITE-On INC	LED GREEN CLEAR 0603 SMD
20	D6,D7,D8,D9,D30,D31, D32,D33	8	blue	led_0603	—	EAST16084BA0	Everlight	LED BLUE CLEAR 2SMD
21	D12	1	CDBA340-G	CDBA340-G	—	CDBA340-G	Comchip Technology	DIODE SCHOTTKY 40V 3A DO214AC
22	D23	1	Red	led_0603	—	LTST-C193KRKT-5A	LITE-On INC	LED RED CLEAR 0603 SMD
23	VCC_DPHY1,VCC_CORE1,VCCIO1,GND1,VCCIO2, GND2,GND3,GND4, GND5,1K_VCCIO0, 1K_VCC_CORE1, 1K_VCCIO1,1V2, 1K_VCCIO2,1K_VCCIO3, TP18,2V5,3V3,5V0, 12V0,VCCIO0	21	TP_S_40_63	tp_s_40_63	DNL	—	—	Square test point, 40mil inner diameter, 63mil outer diameter
24	J1	1	header_1x8	hdr_amp_87220_8_1x8_100	—	22-28-4081	Molex	CONN HEADER 8POS .100 VERT TIN
25	J2	1	65100516121	65100516121	—	65100516121	Würth Elektronik	CONN RCPT USB2.0 MINI B SMD R/A
26	J3	1	PJ-032A	PJ-032A	—	PJ-032A	CUI Inc.	CONN PWR JACK 2X5.5MM SOLDER
27	J4,J22	2	73391-0060	73391-0060	—	73391-0060	Molex	CONN SMA RCPT STR 50 OHM PCB
28	J7,J19	3	CON2	CON2	DEFAULT : PIN 1 & 2	—	—	General 100 mils header
29	J8,J9	2	2 Position Terminal Block_0	TERM_BLOCK_2POS_10A	Alternate PN : 284392-2	1727010	Phoenix Contact	TERM BLOCK 2POS 3.81MM PCB GRN
30	J16	1	HEADER 3	header1X3	DEFAULT : PIN 1 & 2	—	—	General 100 mils Header 1x3
31	J18,J31	2	HEADER 5X2	header2X5	REGULAR 100MIL HEADER	—	—	General 100 Mils 2*5 header

© 2020-2023 Lattice Semiconductor Corp. All Lattice trademarks, registered trademarks, patents, and disclaimers are as listed at www.latticesemi.com/legal.
All other brand or product names are trademarks or registered trademarks of their respective holders. The specifications and information herein are subject to change without notice.

Item	Reference	Qty	Part	PCB Footprint	Comments	PART_NUMBER	Manufacturer	Description
32	J23	1	4 HEADER	CON4	REGULAR 100MIL HEADER	—	—	General 100 mils 4 Position header
33	J24	1	Tri-Con	TriCon	DEFAULT : PIN 1 & 2	—	—	General 100 mils header
34	J25	1	Tri-Con	TriCon	DEFAULT : PIN 2 & 3	—	—	General 100 mils header
35	J26,J27	2	Tri-Con	TriCon	REGULAR 100MIL HEADER	—	—	General 100 mils header
36	J28	1	CON6	HDR1X6	REGULAR 100MIL HEADER	—	—	General 100 mils header
37	J29	1	CON3	HDR1X3	DEFAULT : PIN 2 & 3	—	—	General 100 mils header
38	J32	1	CON3	HDR1X3	REGULAR 100MIL HEADER	—	—	—
39	J35,J36	2	CON3	HDR1X3	DEFAULT : PIN 1 & 2	—	—	General 100 mils header
40	J37	1	CON2	CON2	REGULAR 100MIL HEADER	—	—	General 100 mils header
41	L1,L2,L3,L4,L5,L6,L7,L9	8	600ohm 500mA	FB0603	—	BLM18AG601SN1D	Murata	FERRITE BEAD 600 OHM 0603 1LN
42	L8	1	4.7uH	MPLC0730L4R7	—	MPLC0730L4R7	Kemet	FIXED IND 4.7UH 5A 41 MOHM SMD
43	L10,L11,L12	3	120ohm 1.3A	FB0402	—	BLM15PD121SN1D	Murata	FERRITE BEAD 120 OHM 0402 1LN
44	MH1,MH2,MH3,MH4, MH5,MH6,MH7,MH8, MH9,MH10	10	ThruHole	MTG125	DNL	—	—	—
45	Q9,Q10,Q11	3	MMBT2222A	SM_SOT23-3	—	MMBT2222A,215	Nexperia USA Inc.	TRANS NPN 40V 0.6A SOT23
46	R1,R2,R3,R56,R131,R171,R175,R176,R177,R178, R403,R404,R405,R440, R445,R477,R478,R479, R480,R483,R484,R485, R486	23	4.7k	R0603	—	CRCW06034K70FKEA	Vishay	RES SMD 4.7K OHM 1% 1/10W 0603
47	R4,R5,R6,R7,R15,R16, R26,R37,R39,R159,R165,R167,R180,R181,R183, R192,R412,R413,R414, R415,R416,R420,R421, R424,R425,R431,R433, R447,R451,R452,R453, R454,R455,R456,R465, R466	36	0	R0603	—	RC0603JR-070RL	Yageo	RES SMD 0.0OHM JUMPER 1/10W 0603

© 2020-2023 Lattice Semiconductor Corp. All Lattice trademarks, registered trademarks, patents, and disclaimers are as listed at www.latticesemi.com/legal.
All other brand or product names are trademarks or registered trademarks of their respective holders. The specifications and information herein are subject to change without notice.

Item	Reference	Qty	Part	PCB Footprint	Comments	PART_NUMBER	Manufacturer	Description
48	R496	1	0	R0603	DNL	RC0603JR-070RL	Yageo	RES SMD 0.0OHM JUMPER 1/10W 0603
49	R9,R10	2	2k2	R0603	—	CRCW06032K20FKEA	Vishay	RES SMD 2.2K OHM 1% 1/10W 0603
50	R11,R17	2	12k	R0603	—	RC0603FR-0712KL	Yageo	RES SMD 12K OHM 1% 1/10W 0603
51	R12,R13,R14,R123,R124,R125,R395,R399,R400	9	10K	R0603	—	RMCF0603JT10K0	Stackpole Electronics Inc	RES SMD 10K OHM 5% 1/10W 0603
52	R18,R23,R418,R419, R422,R423,R481,R482	8	0	R0603	DNL	RC0603JR-070RL	Yageo	RES SMD 0.0OHM JUMPER 1/10W 0603
53	R19,R20,R21,R25,R28, R33,R184,R186,R188, R190,R410,R417,R434, R435,R448,R449	16	1	R0603	—	CRCW06031R00JNEAHP	Vishay	RES SMD 1 OHM 5% 1/4W 0603
54	R22,R144	2	4.7k	R0603	DNL	RC0603JR-074K7L	Yageo	RES SMD 4.7K OHM 5% 1/10W 0603
55	R24,R185,R187,R189, R411	5	1	R0603	DNL	CRCW06031R00JNEAHP	Vishay	RES SMD 1 OHM 5% 1/4W 0603
56	R36,R499	2	1K	R0603	—	RC0603FR-071KL	Yageo	RES SMD 1K OHM 1% 1/10W 0603
57	R51,R487,R489,R491	4	100E	R0603	—	RC0603FR07100RL	Yageo	RES SMD 100 OHM 1% 1/10W 0603
58	R54,R55,R57,R59	4	470E	R0402	—	RC0402FR-07470RL	Yageo	RES SMD 470 OHM 1% 1/16W 0402
59	R76,R77,R497,R498	4	2K	R0402	—	ERJ-2RKF2001X	Panasonic	RES SMD 2K OHM 1% 1/10W 0402
60	R78	1	10K	R0402	—	RMCF0402JT10K0	Stackpole Electronics Inc	RES SMD 10K OHM 5% 1/16W 0402
61	R80,R500	2	680R	R0402	—	RMCF0402JT680R	Stackpole Electronics Inc	RES SMD 680 OHM 5% 1/16W 0402
62	R83	1	30E	R0603	—	RC0603FR-0730RL	Yageo	RES SMD 30 OHM 1% 1/10W 0603
63	R160,R232,R432	3	100K	R0402	—	ERJ-2RKF1003X	Panasonic	RES SMD 100K OHM 1% 1/10W 0402
64	R166,R442,R443,R444	4	1K	R0402	—	RMCF0402JT1K00	Stackpole Electronics Inc	RES SMD 1K OHM 5% 1/16W 0402
65	R229	1	15K	R0402	—	ERJ-2RKF1502X	Panasonic	RES SMD 15K OHM 1% 1/10W 0402

© 2020-2023 Lattice Semiconductor Corp. All Lattice trademarks, registered trademarks, patents, and disclaimers are as listed at www.latticesemi.com/legal.
All other brand or product names are trademarks or registered trademarks of their respective holders. The specifications and information herein are subject to change without notice.

Item	Reference	Qty	Part	PCB Footprint	Comments	PART_NUMBER	Manufacturer	Description
66	R230	1	34K	R0402	—	ERJ-2RKF3402X	Panasonic	RES SMD 34K OHM 1% 1/10W 0402
67	R231	1	536K	R0402	—	ERJ-2RKF5363X	Panasonic	RES SMD 536K OHM 1% 1/10W 0402
68	R233,R436,R437,R438, R439	5	470E	R0603	—	RC0603FR-07470RL	Yageo	RES SMD 470 OHM 1% 1/10W 0603
69	R441	1	3K	R0402	—	RC0402FR-073KL	Yageo	RES SMD 3K OHM 1% 1/16W 0402
70	R446,R457,R458,R459, R460,R461,R462,R463, R464,R467,R468,R469, R470,R471,R472,R475, R476	17	0	R0402	—	RC0402JR-070RL	Yageo	RES SMD 0.0OHM JUMPER 1/16W 0402
71	R450	1	0	R0402	DNL	RC0402JR-070RL	Yageo	RES SMD 0.0OHM JUMPER 1/16W 0402
72	R488,R490,R492	3	47K	R0402	—	RC0402FR-0747KL	Yageo	RES SMD 47K OHM 1% 1/16W 0402
73	SW1	1	PWR	TS01CQE_switch	—	TS01CQE	C&K Components	SWITCH SLIDE SPDT 3A 120V
74	SW2,SW3,SW4,SW5	4	TL1015AF160QG	2psmd_eswitch	—	TL1015AF160QG	E-Switch	SWITCH TACTILE SPST-NO 0.05A 12V
75	U1	1	FT2232HL	tqfp64_0p5_12p2x12p2_h1p6	CUSTOMER SUPPLIED	FT2232HL-REEL	FTDI	IC USB HS DUAL UART/FIFO 64-LQFP
76	U2	1	93LC56-SO8	so8_50_244	—	93LC56C-I/SN	Microchip	IC EEPROM 2KBIT 3MHZ 8SOIC
77	U3	1	FUSE	0154004DRT	—	0154004.DRT	Littelfuse	FUSE BRD MNT 4A 125VAC/VDC 2SMD
78	U5	1	NCP1117ST33T3G	sot223_4p	—	NCP1117ST33T3G	On Semi	IC REG LDO 3.3V 1A SOT223
79	U6	1	NCP1117ST25T3G	sot223_4p	—	NCP1117ST25T3G	On Semi	IC REG LDO 2.5V 1A SOT223
80	U7,U9,U11,U12	4	Hirose - FX12 - 40 Pos	Hirose-FX12	—	FX12B-40P-0.4SV	Hirose Electric Co Ltd	CONN PLUG 40POS 0.4MM SMD SHIELD
81	U8	1	LIF-MD6000-6MG81I	LIFMD6000-csfBGA81	CUSTOMER SUPPLIED	LIF-MD6000-6MG81I	Lattice semiconductor	LATTCE CROSSLNK - NTERFACE MP D-
82	U14	1	MX25L1606EM2I-12G	SOIC8_MX25L1606E	—	MX25L1606EM2I-12G	Micron Technology Inc	IC FLASH 16MBIT SPI 86MHZ 8SOP

© 2020-2023 Lattice Semiconductor Corp. All Lattice trademarks, registered trademarks, patents, and disclaimers are as listed at www.latticesemi.com/legal.
All other brand or product names are trademarks or registered trademarks of their respective holders. The specifications and information herein are subject to change without notice.

Item	Reference	Qty	Part	PCB Footprint	Comments	PART_NUMBER	Manufacturer	Description
83	U15	1	AP7313-12SAG-7	SOT23	—	AP7313-12SAG-7	Diodes Inc	IC REG LDO 1.2V 0.15A SOT-23
84	U17	1	NCP1117ST18T3G	sot223_4p	—	NCP1117ST18T3G	On Semi	IC REG LDO 1.8V 1A SOT223
85	U18	1	LT3693	LT3693_10QFN	Alternate PN : LT3680EDD#TRPBF	LT3693IDD#TRPBF	Linear Technology	IC REG BUCK ADJ 3.5A 10DFN
86	U19	1	LCMXO3LF-1300E-5MG121C	LCMXO3LF-1200E-MG121	CUSTOMER SUPPLIED	LCMXO3LF-1300E-5MG121C	Lattice Semiconductor	IC FPGA 100 I/O 121CSFBGA
87	U20	1	ESDR0502N	ESDR0502N	—	ESDR0502NMUTBG	ON Semiconductor	TVS DIODE 5.5VWM 6UDFN
88	U21	1	STG3693QTR	STG3693QTR	—	STG3693QTR	STMicroelectronics	IC SWITCH QUAD SPDT 16QFN
89	X1	1	SXT32418BB27-12.000MT	xtal_4p_SXT32418BB27	—	SXT32418BB27-12.000MT	Suntsu Electronics, Inc.	CRYSTAL 12.0000MHZ 18PF SMD
90	X3,X4	2	831026368	27MHZ_OSC_831026368	—	831026368	Würth Elektronik	XTAL OSC XO 27.0000MHZ CMOS
91	Shunts for Jumpers	8	—	—	—	SPC02SYAN	Sullins	CONN JUMPER SHORTING GOLD FLASH
92	LIF-MD6000 MASTER LINK BOARD REVD PCB	1	—	—	—	305-PD-19-0066	PACTRON	—

© 2020-2023 Lattice Semiconductor Corp. All Lattice trademarks, registered trademarks, patents, and disclaimers are as listed at www.latticesemi.com/legal.
All other brand or product names are trademarks or registered trademarks of their respective holders. The specifications and information herein are subject to change without notice.

Appendix C. SMA-IOL-EVN-BRD Schematics

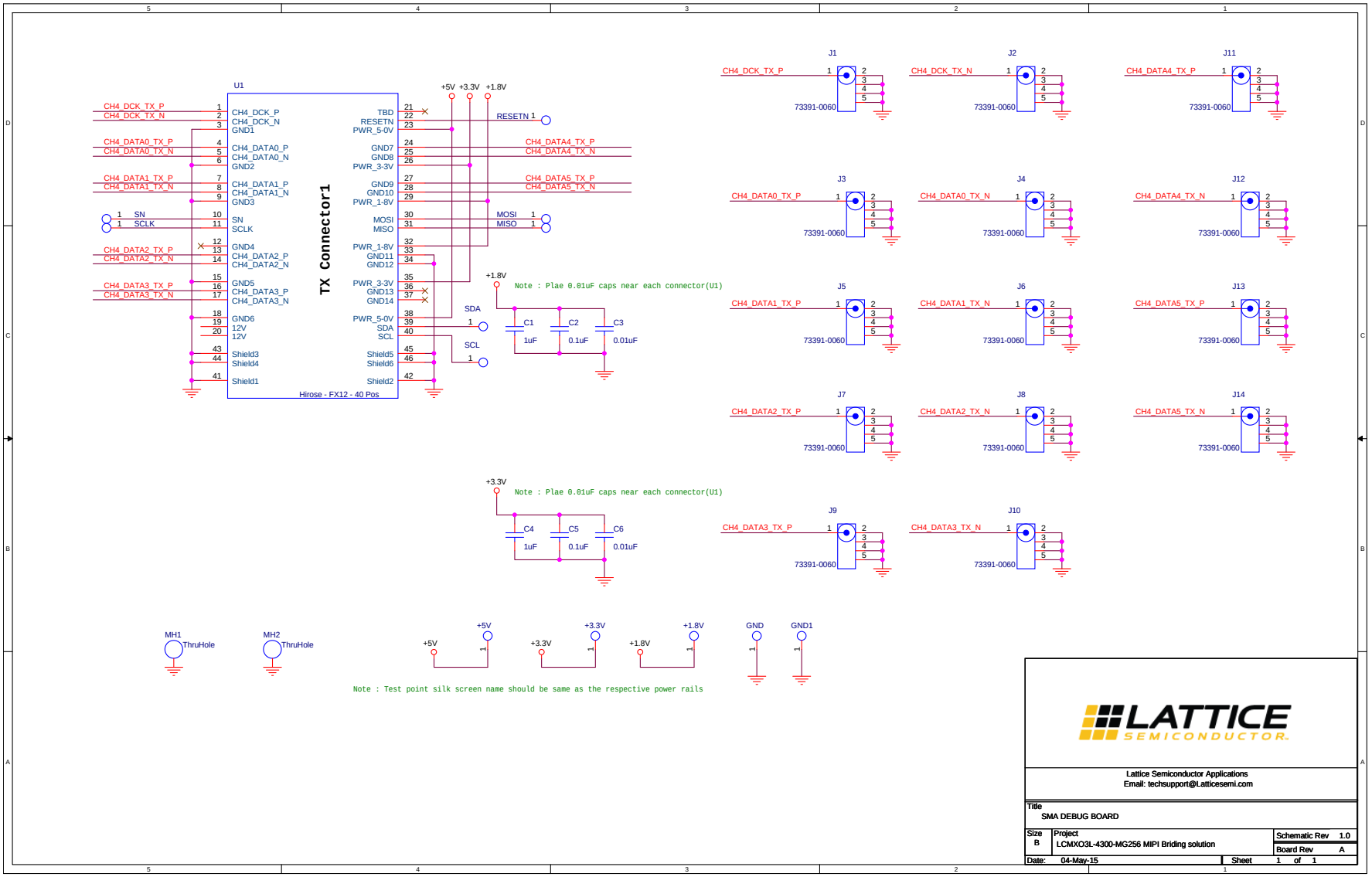

Figure C.1. SMA Debug Board

© 2020-2023 Lattice Semiconductor Corp. All Lattice trademarks, registered trademarks, patents, and disclaimers are as listed at www.latticesemi.com/legal.
All other brand or product names are trademarks or registered trademarks of their respective holders. The specifications and information herein are subject to change without notice.

Appendix D. SMA-IOL-EVN-BRD Bill of Materials

SMA I/O Link Board Bill of Materials

Item	Reference	Qty	Part	PCB Footprint	Comments	PART_NUMBER	Manufacturer	Description
1	GND1, +5 V, +1.8 V, +3.3 V, SN, SDA, SCLK, SCL, RESETN, MOSI, MISO, GND	12	TP_S_40_63	tp_s_40_63	DNI	—	—	Square test point, 40 mil inner diameter, 63 mil outer diameter
2	C1, C4	2	1 µF	C0402	—	C0402C105K9PACTU	Kemet	CAP CERAMIC 1 µF 6.3 V X5R 0402
3	C2, C5	2	0.1 µF	C0402	—	C0402C104K4RACTU	Kemet	CAP CERAMIC 0.1 µF 16 V X7R 0402
4	C3, C6	2	0.01 µF	C0402	—	C0402C103J4RACTU	Kemet	CAP CERAMIC 10 nF 16 V 5% X7R 0402
5	J1, J2, J3, J4, J5, J6, J7, J8, J9, J10, J11, J12, J13, J14	14	73391-0060	73391-0060	—	73391-0060	Molex	Molex Straight 50O Through Hole SMA Connector, jack, Solder Termination
6	MH1, MH2	2	Thru Hole	MTG125	—	—	—	—
7	U1	1	Hirose - FX12 - 40 Pos	Hirose-FX12S	—	FX12B-40S-0.4SV	Hirose Electric Co Ltd	Conn Board to Board PL 40 POS 0.4 mm Solder ST SMD T/R
8	SMA IOLINK BOARD PCB	1	—	—	—	305-PD-15-0589	PACTRON	—

© 2020-2023 Lattice Semiconductor Corp. All Lattice trademarks, registered trademarks, patents, and disclaimers are as listed at www.latticesemi.com/legal.
All other brand or product names are trademarks or registered trademarks of their respective holders. The specifications and information herein are subject to change without notice.

Appendix E. B-IOL-EVN-BRD Schematics

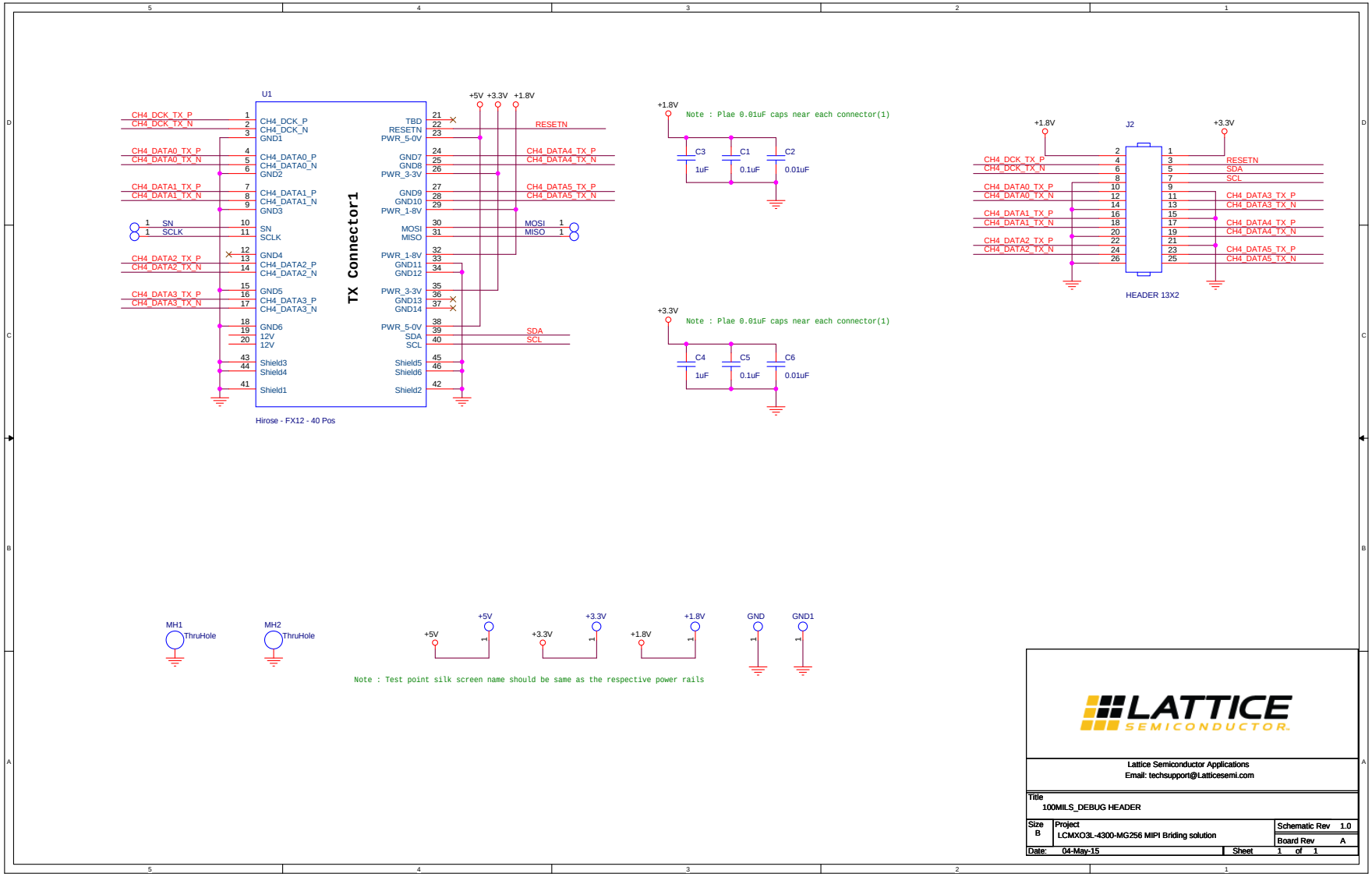

Figure E.1. 100MILS_DEBUG Header

© 2020-2023 Lattice Semiconductor Corp. All Lattice trademarks, registered trademarks, patents, and disclaimers are as listed at www.latticesemi.com/legal.
All other brand or product names are trademarks or registered trademarks of their respective holders. The specifications and information herein are subject to change without notice.

Appendix F. B-IOL-EVN-BRD Bill of Materials

Breakout I/O Link Board Bill of Materials

Item	Reference	Qty	Part	PCB Footprint	Comments	PART_NUMBER	Manufacturer	Description
1	GND1, +5 V, +1.8 V, +3.3 V, SN, SCLK, MOSI, MISO, GND	9	TP_S_40_63	tp_s_40_63	DNL	—	—	Square test point, 40 mil inner diameter, 63 mil outer diameter
2	C1, C5	2	0.1 µF	C0402	—	C0402C104K4RACTU	Kemet	CAP CERAMIC 0.1 µF 16 V X7R 0402
3	C2, C6	2	0.01 µF	C0402	—	C0402C103J4RACTU	Kemet	CAP CERAMIC 10 nF 16 V 5% X7R 0402
4	C3, C4	2	1 µF	C0402	—	C0402C105K9PACTU	Kemet	CAP CERAMIC 1 µF 6.3 V X5R 0402
5	J2	1	HEADER 13X2	13X2_HDR	REGULAR 100 MIL HEADER	—	—	—
6	MH1, MH2	2	ThruHole	MTG125	DNL	—	—	—
7	U1	1	Hirose - FX12 - 40 Pos	Hirose-FX12S	—	FX12B-40S-0.4SV	Hirose Electric Co Ltd	Conn Board to Board PL 40 POS 0.4 mm Solder ST SMD T/R
8	BREAKOUT IOLINK BOARD PCB	1	—	—	—	305-PD-15-0595	PACTRON	—

© 2020-2023 Lattice Semiconductor Corp. All Lattice trademarks, registered trademarks, patents, and disclaimers are as listed at www.latticesemi.com/legal.
All other brand or product names are trademarks or registered trademarks of their respective holders. The specifications and information herein are subject to change without notice.

Revision History

Revision 1.1, May 2023

Section	Change Summary
All	• Minor adjustments in formatting across the document. • Changed document title to CrossLink LIF-MD6000 Master Link Board – Revision E. • Changed all Rev D references to Rev E.
Introduction	Updated Figure 1.1. Top View of Master Link Rev E Board and its Key Components and Figure 1.2. Bottom View of Master Link Rev E Board.
Technical Support Assistance	Added reference to the Lattice Answer Database on the Lattice website.
Appendix A. LIF-MD6000-ML-EVN-BRD Schematics	Updated Figure A.1. LIF-MD6000 Master Link Rev E Board Block Diagram to Figure A.8. Layout Guidelines.
Appendix B. LIF-MD6000-ML-EVN-BRD Bill of Materials	Updated table to align with the latest Bill of Materials.

Revision 1.0, January 2020

Section	Change Summary
All	Initial release.

© 2020-2023 Lattice Semiconductor Corp. All Lattice trademarks, registered trademarks, patents, and disclaimers are as listed at www.latticesemi.com/legal.
All other brand or product names are trademarks or registered trademarks of their respective holders. The specifications and information herein are subject to change without notice.

www.latticesemi.com